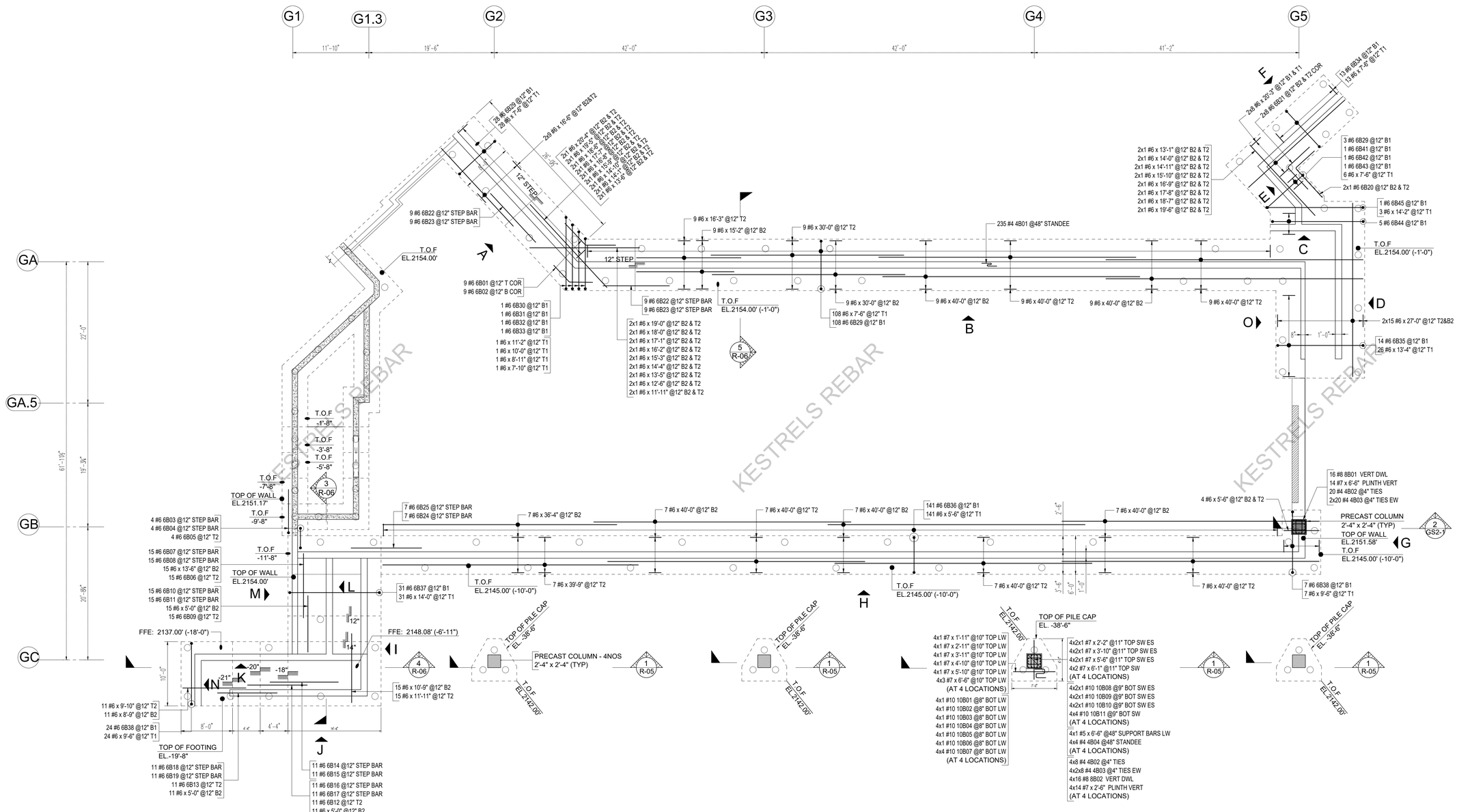

NORTH

GARAGE FOUNDATION PLAN AT BASEMENT

SCALE: 1/8" = 1'-0"
REF: GS1-1, GS3-1, GS3-2, GS3-3

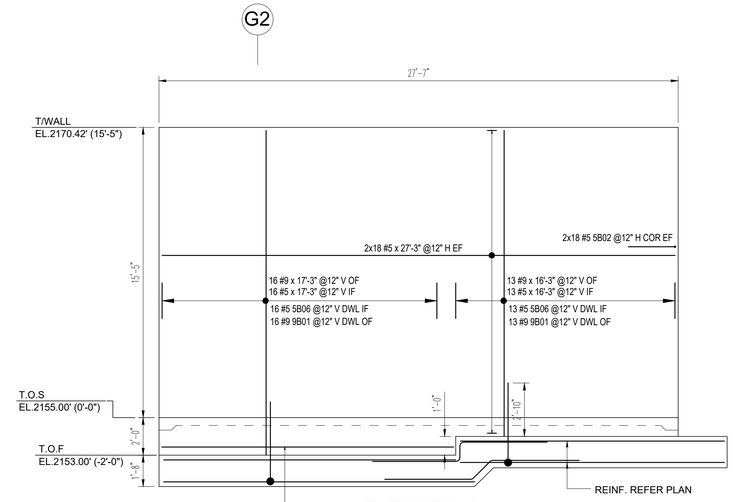

ELEVATION - A

SCALE: 1/4" = 1'-0"
REF: GS1-1

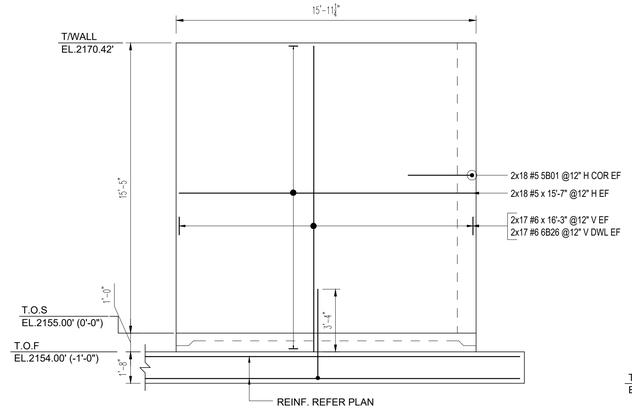

ELEVATION - C

SCALE: 1/4" = 1'-0"
REF: GS1-1

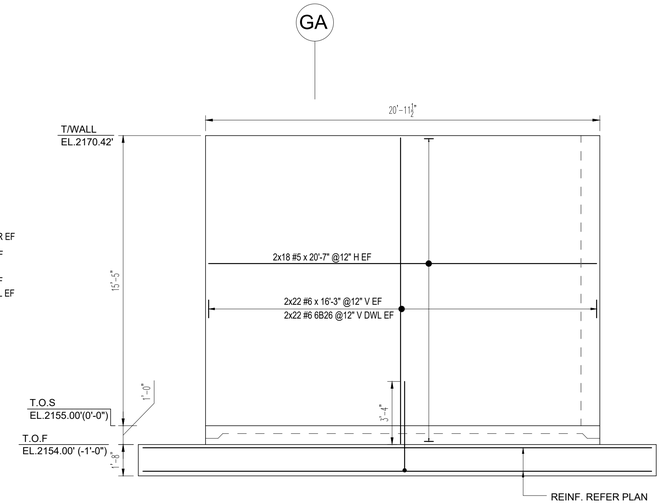

ELEVATION - D

SCALE: 1/4" = 1'-0"
REF: GS1-1

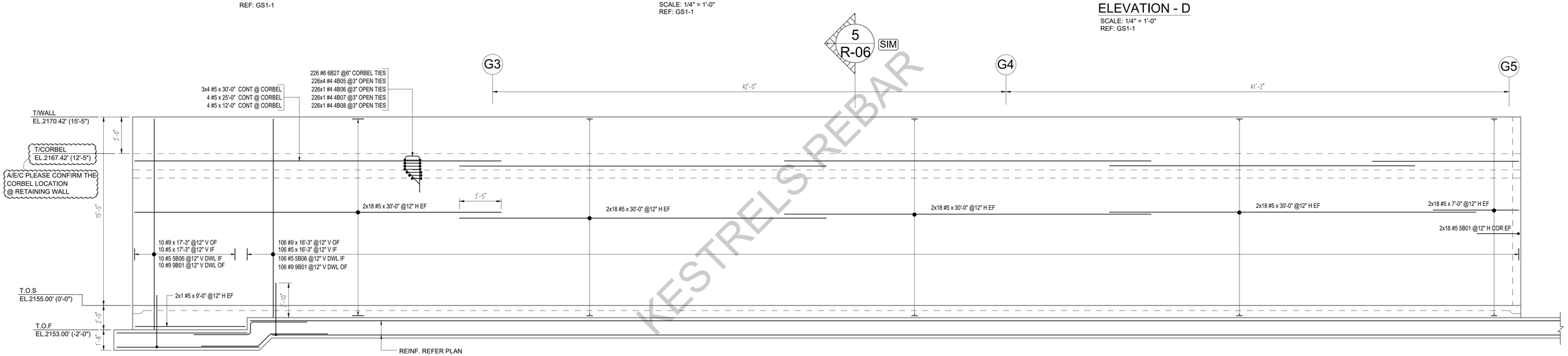

KESTRELS REBAR

ELEVATION - B

SCALE: 1/4" = 1'-0"
REF: GS1-1

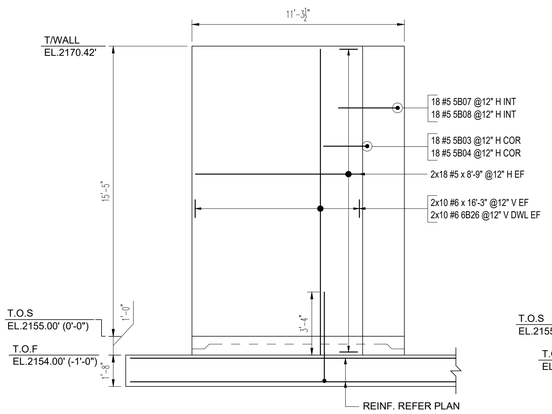

ELEVATION - E

SCALE: 1/4" = 1'-0"
REF: GS1-1

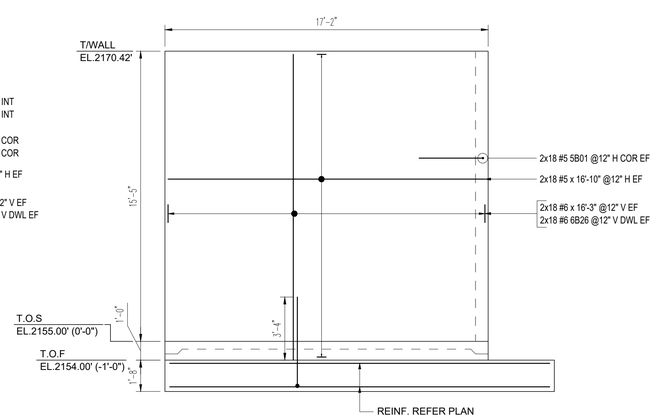

ELEVATION - F

SCALE: 1/4" = 1'-0"
REF: GS1-1

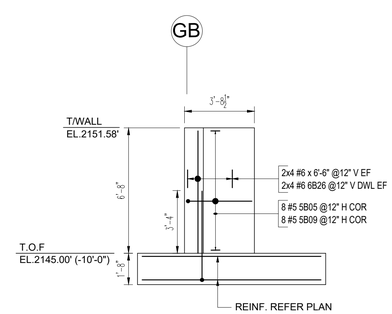

ELEVATION - G

SCALE: 1/4" = 1'-0"
REF: GS1-1

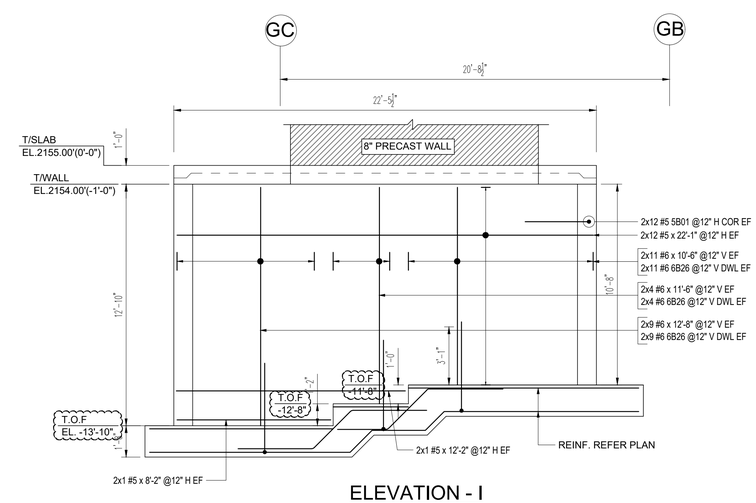

ELEVATION - I

SCALE: 1/4" = 1'-0"
REF: GS1-1

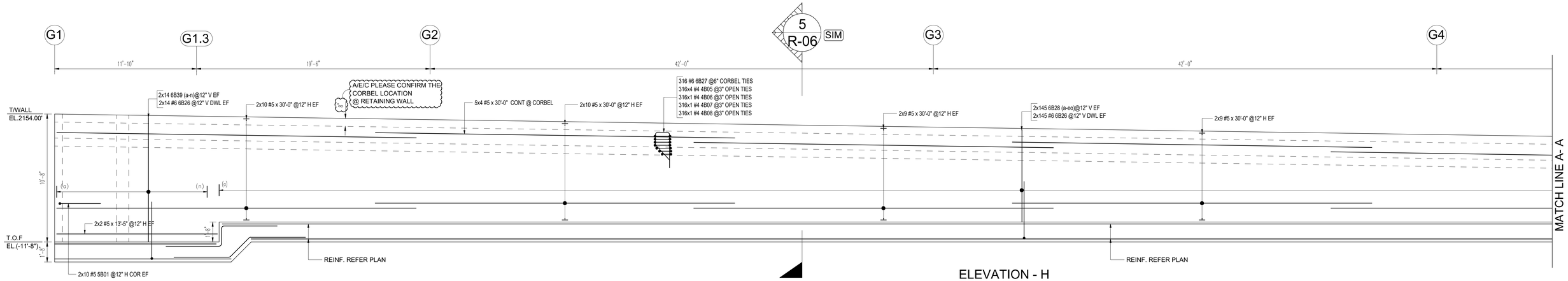

ELEVATION - H

SCALE: 1/4" = 1'-0"
REF: GS1-1

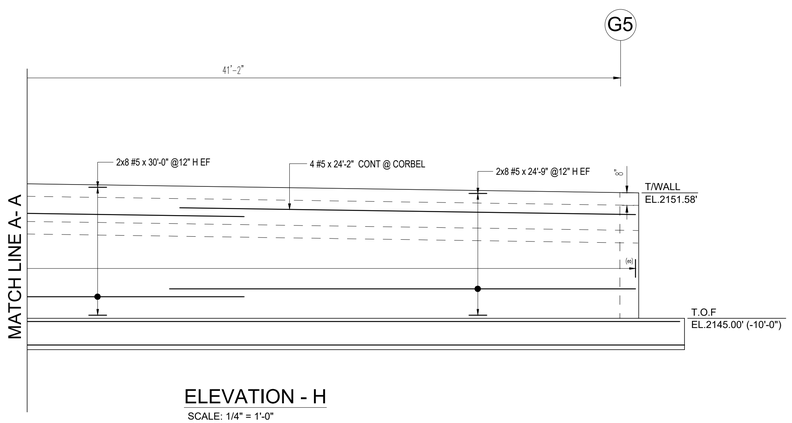

ELEVATION - H

SCALE: 1/4" = 1'-0"
REF: GS1-1

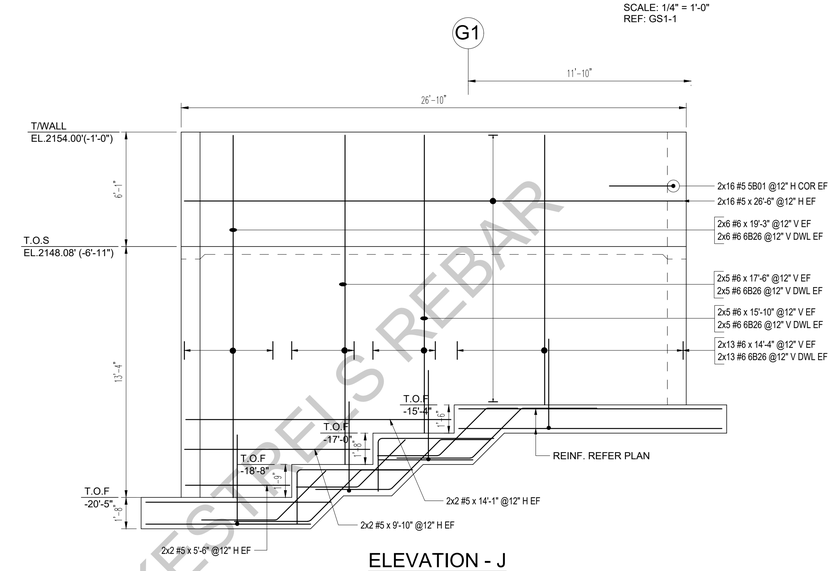

ELEVATION - J

SCALE: 1/4" = 1'-0"
REF: GS1-1

KESTREL REBAR

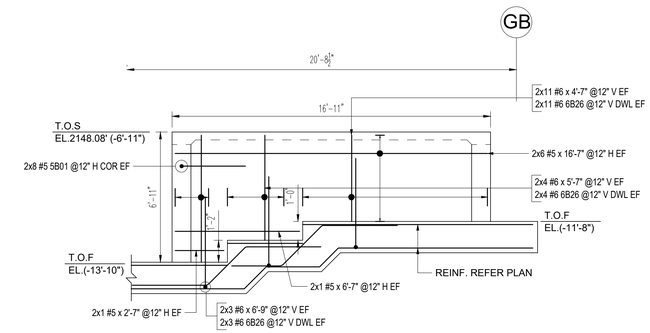

ELEVATION - L

SCALE: 1/4" = 1'-0"
REF: GS1-1

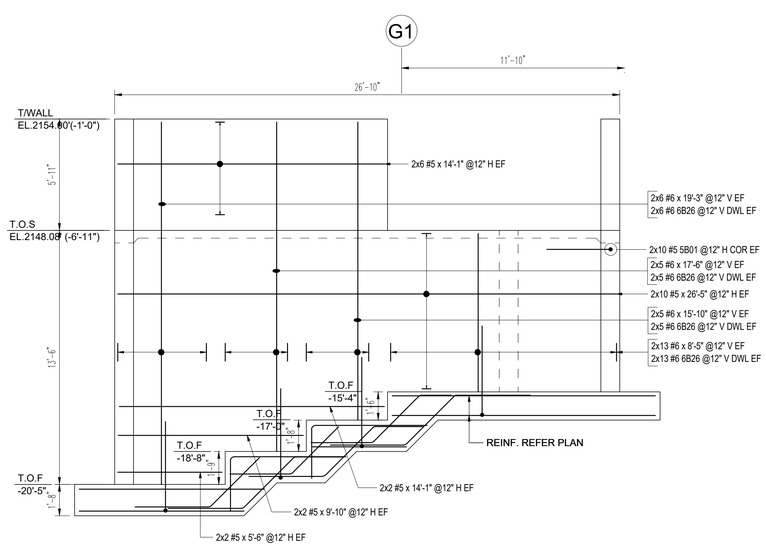

ELEVATION - K

SCALE: 1/4" = 1'-0"
REF: GS1-1

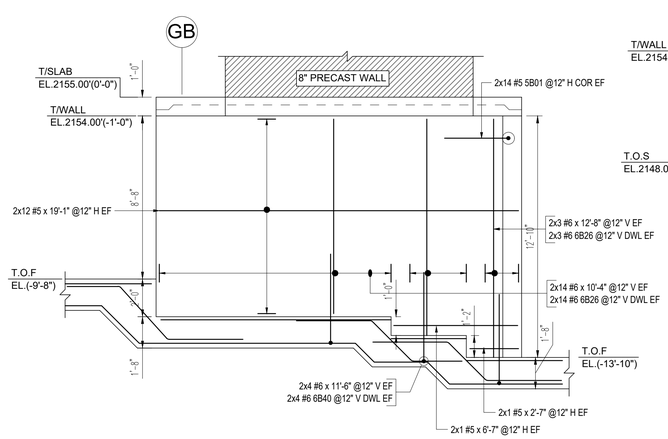

ELEVATION - M

SCALE: 1/4" = 1'-0"
REF: GS1-1

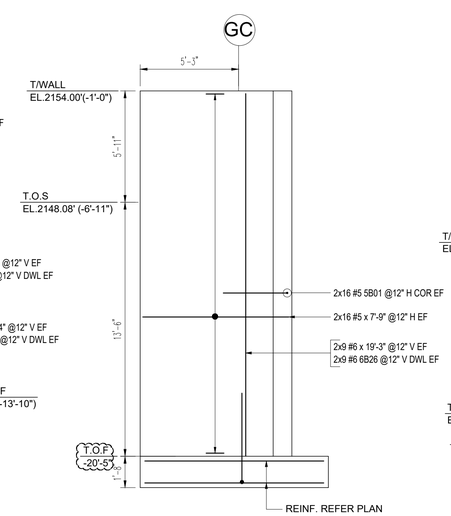

ELEVATION - N

SCALE: 1/4" = 1'-0"
REF: GS1-1

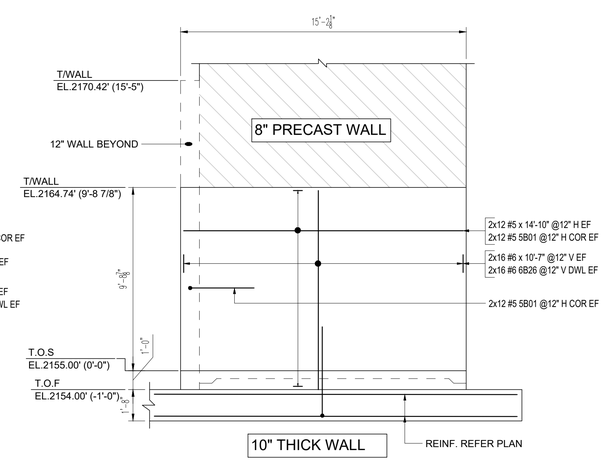

ELEVATION - O

SCALE: 1/4" = 1'-0"
REF: GS1-1

Release Number: R-03 TO R-06

BAR LIST

Bar Mark	Qty	Size	Total Length	Type	'A'	'B'	'C'	'D'	'E'	'F'	'G'	'H'	'J'	'K'	'O'	'R'
4B01	235	#4	5'-8 3/4"	25		1'-6"	1'-0 3/4"	0'-8"	1'-0 3/4"	1'-6"		1'-0"		0'-6"		
4B02	52	#4	9'-11"	T2	0'-4 3/4"	2'-1"	2'-1"	2'-1"	2'-1"		0'-4 3/4"					
4B03	104	#4	6'-11"	T2	0'-4 3/4"	1'-0"	2'-1"	1'-0"	2'-1"		0'-4 3/4"					
4B04	16	#4	9'-11 3/4"	25		1'-6"	2'-9 3/4"	1'-4"	2'-9 3/4"	1'-6"		2'-9"		1'-4 3/4"		
4B05	2168	#4	2'-3 3/4"	1	0'-6"	1'-3 3/4"					0'-6"		0'-4"			
4B06	542	#4	2'-2 3/4"	1	0'-6"	1'-2 3/4"					0'-6"		0'-4"			
4B07	542	#4	1'-11 3/4"	1	0'-6"	0'-11 3/4"					0'-6"		0'-4"			
4B08	542	#4	1'-9"	1	0'-6"	0'-9"					0'-6"		0'-4"			
5B01	328	#5	6'-10"	17		3'-5"	3'-5"									
5B02	36	#5	6'-9 3/4"	3		3'-5"	3'-4 3/4"					2'-6"		2'-3 3/4"	5'-8 3/4"	
5B03	18	#5	7'-2"	3		3'-9 3/4"	3'-4 3/4"					2'-4"		2'-5 3/4"	6'-3"	
5B04	18	#5	6'-11"	3		3'-6 3/4"	3'-4 3/4"					2'-4"		2'-5 3/4"	6'-0"	
5B05	8	#5	6'-1 3/4"	17		2'-8 3/4"	3'-5"									
5B06	145	#5	5'-1"	2	0'-10"	4'-3"										
5B07	18	#5	6'-7"	17		3'-2"	3'-5"									
5B08	18	#5	7'-8"	17		3'-2"	4'-6"									
5B09	8	#5	6'-9 3/4"	17		3'-4 3/4"	3'-5"									
6B01	9	#6	9'-4"	3		4'-8"	4'-8"					3'-5 3/4"		3'-2"	7'-10"	
6B02	9	#6	7'-2"	3		3'-7"	3'-7"					2'-7 3/4"		2'-5 3/4"	6'-0 3/4"	
6B03	4	#6	12'-4 3/4"	3		4'-0"	4'-3 3/4"	4'-0 3/4"				3'-1 3/4"		3'-0"	11'-0 3/4"	
6B04	4	#6	9'-10 3/4"	3		4'-0"	4'-1 3/4"	1'-8 3/4"				2'-11 3/4"		2'-10 3/4"	8'-7 3/4"	
6B05	4	#6	9'-11"	17		3'-2"	6'-9"									
6B06	15	#6	16'-7"	17		2'-2"	14'-5"									
6B07	15	#6	10'-10 3/4"	3		4'-0"	2'-10 3/4"	4'-0"				2'-1 3/4"		2'-0"	10'-0"	
6B08	15	#6	7'-3 3/4"	3		2'-10 3/4"	2'-8 3/4"	1'-8"				1'-11 3/4"		1'-10 3/4"	6'-5 3/4"	
6B09	15	#6	7'-10"	17		2'-4"	5'-6"									
6B10	15	#6	9'-8 3/4"	3		4'-0"	3'-0 3/4"	2'-8"				2'-2 3/4"		2'-1 3/4"	8'-9 3/4"	
6B11	15	#6	8'-6 3/4"	3		4'-0"	2'-10 3/4"	1'-8"				2'-1"		1'-11 3/4"	7'-7 3/4"	
6B12	11	#6	9'-0"	17		2'-10"	6'-2"									
6B13	11	#6	9'-1"	17		2'-11"	6'-2"									
6B14	11	#6	11'-9"	3		4'-0"	3'-9"	4'-0"				2'-8 3/4"		2'-7 3/4"	10'-7 3/4"	
6B15	11	#6	8'-6"	3		3'-3 3/4"	3'-6 3/4"	1'-8"				2'-7"		2'-5 3/4"	7'-5"	
6B16	11	#6	10'-5"	3		4'-0"	3'-9"	2'-8"				2'-8 3/4"		2'-7 3/4"	9'-3 3/4"	
6B17	11	#6	6'-9 3/4"	3		3'-3 3/4"	3'-6 3/4"					2'-6 3/4"		2'-5 3/4"	5'-8 3/4"	
6B18	11	#6	10'-5 3/4"	3		4'-0"	3'-10 3/4"	2'-7"				2'-9 3/4"		2'-8 3/4"	9'-3 3/4"	
6B19	11	#6	7'-8 3/4"	3		4'-0"	3'-8 3/4"					2'-8"		2'-6 3/4"	6'-6 3/4"	
6B20	2	#6	10'-2"	17		4'-0"	6'-2"									
6B21	16	#6	9'-4"	17		4'-8"	4'-8"									
6B22	18	#6	10'-9 3/4"	3		4'-8"	1'-5"	4'-8 3/4"				1'-0 3/4"		0'-11 3/4"	10'-3 3/4"	
6B23	18	#6	10'-5"	20		4'-8"	1'-1"	4'-8"								
6B24	7	#6	11'-1"	20		4'-8"	1'-9"	4'-8"								
6B25	7	#6	11'-8 3/4"	3		4'-8"	2'-4 3/4"	4'-8"				1'-8 3/4"		1'-7 3/4"	10'-11 3/4"	
6B26	744	#6	5'-9"	2	1'-0"	4'-9"										
6B27	542	#6	7'-0 3/4"	16	3'-0"	1'-2 3/4"	1'-1"	1'-8 3/4"				1'-2 3/4"		1'-2 3/4"	2'-3 3/4"	
6B28a	2	#6	8'-8"			8'-8"										
VARIES TO																
6B28eo	2	#6	6'-6"			6'-6"										
6B29	139	#6	8'-10"	1	0'-8"	7'-6"					0'-8"		0'-6"			
6B30	1	#6	12'-6"	1	0'-8"	11'-2"					0'-8"		0'-6"			
6B31	1	#6	11'-4"	1	0'-8"	10'-0"					0'-8"		0'-6"			
6B32	1	#6	10'-3"	1	0'-8"	8'-11"					0'-8"		0'-6"			
6B33	1	#6	9'-2"	1	0'-8"	7'-10"					0'-8"		0'-6"			
6B34	13	#6	8'-10 3/4"	1	0'-8"	7'-6 3/4"					0'-8"		0'-6"			
6B35	14	#6	14'-8"	1	0'-8"	13'-4"					0'-8"		0'-6"			
6B36	141	#6	6'-10"	1	0'-8"	5'-6"					0'-8"		0'-6"			
6B37	31	#6	15'-4"	1	0'-8"	14'-0"					0'-8"		0'-6"			
6B38	31	#6	10'-10"	1	0'-8"	9'-6"					0'-8"		0'-6"			
6B39a	2	#6	10'-5"			10'-5"										
VARIES TO																
6B39n	2	#6	10'-3"			10'-3"										
6B40	8	#6	5'-7"	2	0'-10"	4'-9"										
6B41	1	#6	9'-5"	1	0'-8"	8'-1"					0'-8"		0'-6"			
6B42	1	#6	10'-4"	1	0'-8"	9'-0"					0'-8"		0'-6"			
6B43	1	#6	11'-3"	1	0'-8"	9'-11"					0'-8"		0'-6"			
6B44	5	#6	15'-6"	1	0'-8"	14'-2"					0'-8"		0'-6"			
6B45	1	#6	16'-4"	1	0'-8"	15'-0"					0'-8"		0'-6"			
8B01	16	#8	9'-2"	2	1'-4"	7'-10"										
8B02	64	#8	6'-10 3/4"	2	1'-4"	5'-6 3/4"										
9B01	145	#9	9'-1"	2	1'-7"	7'-6"										
10B01	4	#10	4'-9"	1	1'-5"	1'-11"					1'-5"		1'-1 3/4"			
10B02	4	#10	5'-6"	1	1'-5"	2'-8"					1'-5"		1'-1 3/4"			
10B03	4	#10	6'-3 3/4"	1	1'-5"	3'-5 3/4"					1'-5"		1'-1 3/4"			
10B04	4	#10	7'-0 3/4"	1	1'-5"	4'-2 3/4"					1'-5"		1'-1 3/4"			
10B05	4	#10	7'-9 3/4"	1	1'-5"	4'-11 3/4"					1'-5"		1'-1 3/4"			
10B06	4	#10	8'-7"	1	1'-5"	5'-9"					1'-5"		1'-1 3/4"			
10B07	16	#10	9'-4"	1	1'-5"	6'-6"					1'-5"		1'-1 3/4"			
10B08	8	#10	5'-0"	1	1'-5"	2'-2"					1'-5"		1'-1 3/4"			
10B09	8	#10	6'-4"	1	1'-5"	3'-6"					1'-5"		1'-1 3/4"			
10B10	8	#10	7'-7 3/4"	1	1'-5"	4'-9 3/4"					1'-5"		1'-1 3/4"			
10B11	16	#10	8'-11"	1	1'-5"	6'-1"					1'-5"		1'-1 3/4"			

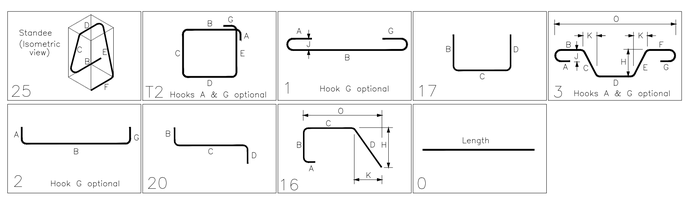

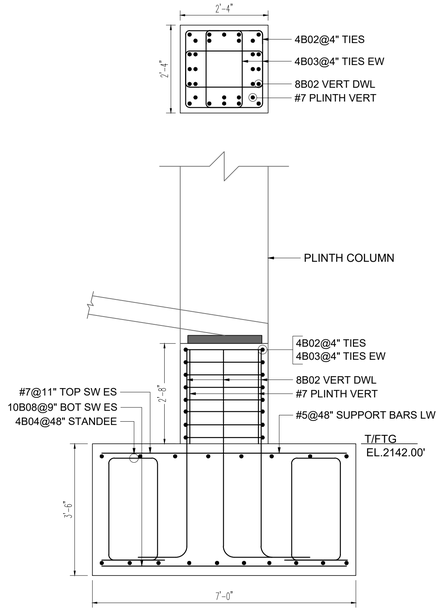

SECTION - 1

SCALE: 1/2" = 1'-0"

REF: 3/GS2-2

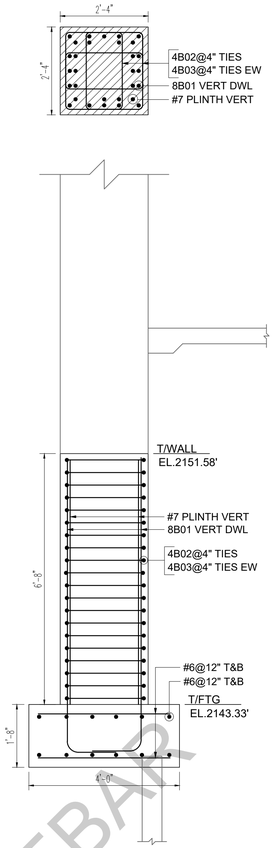

SECTION - 2

SCALE: 1/2" = 1'-0"

REF: 7/GS2-1

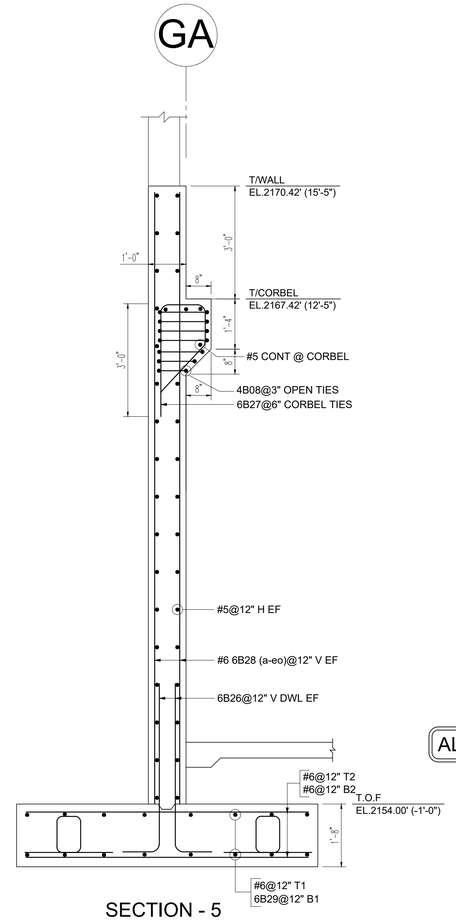

SECTION - 5

SCALE: 1/2" = 1'-0"

REF: 1/GS2-1

LAP SCHEDULE FOR FOOTINGS (CLASS-B)		
SIZE	3000 PSI	
	TOP	OTHER
#3	28"	22"
#4	38"	29"
#5	47"	36"
#6	56"	43"
#7	81"	63"
#8	93"	72"
#9	105"	81"
#10	116"	90"
#11	128"	98"

LAP SCHEDULE FOR CONC. WALL (CLASS-B)		
SIZE	4000 PSI	
	TOP	OTHER
#3	25"	19"
#4	33"	25"
#5	41"	31"
#6	49"	37"
#7	71"	54"
#8	81"	62"
#9	91"	70"
#10	101"	78"
#11	111"	85"

NOTES:-

1. TYPICAL CLEARANCES
   FOOTINGS
   A). TOP - 3"
   B). BOTTOM - 3"
   C). END - 3"
   CONC. WALL
   D). END - 2"
2. A/E/C PLEASE VERIFY THE ALL CLOUDED ITEMS
3. PROVIDE FIELD CUT AS REQUIRED LOCATIONS
4. BARS TO BE PLACED AT EQUAL SPACING U.O.N.
5. TILT HOOK TO ACCOMODATE THE COVER, IF NEED

ALL BARS ARE ASTM A615 GRADE 60 BLACK

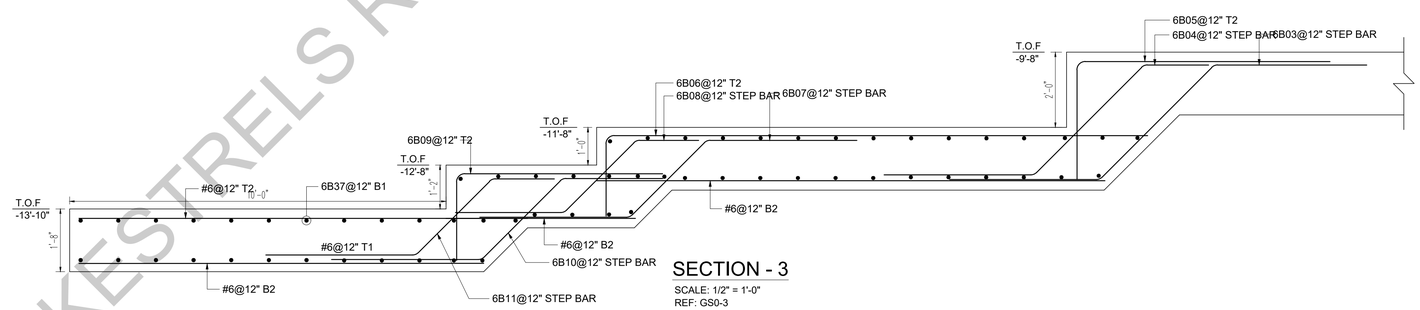

SECTION - 3

SCALE: 1/2" = 1'-0"

REF: GS0-3

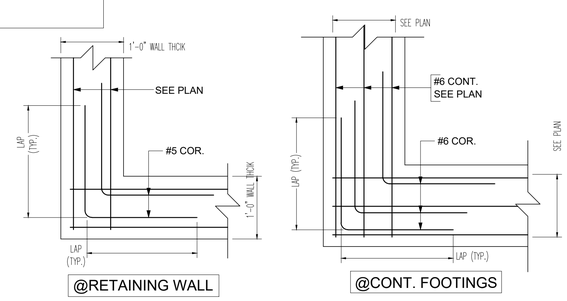

TYPICAL CORNER DETAIL

SCALE: 1/2" = 1'-0"

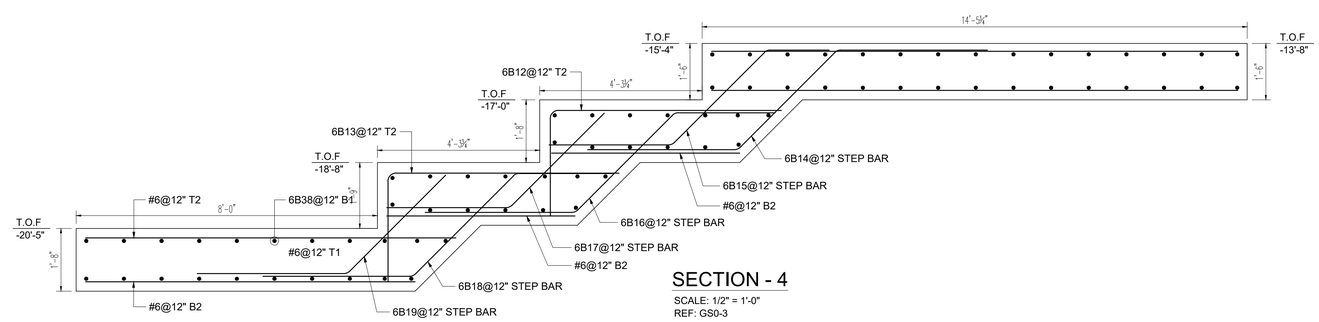

SECTION - 4

SCALE: 1/2" = 1'-0"

REF: GS0-3

KESTRELS REBAR

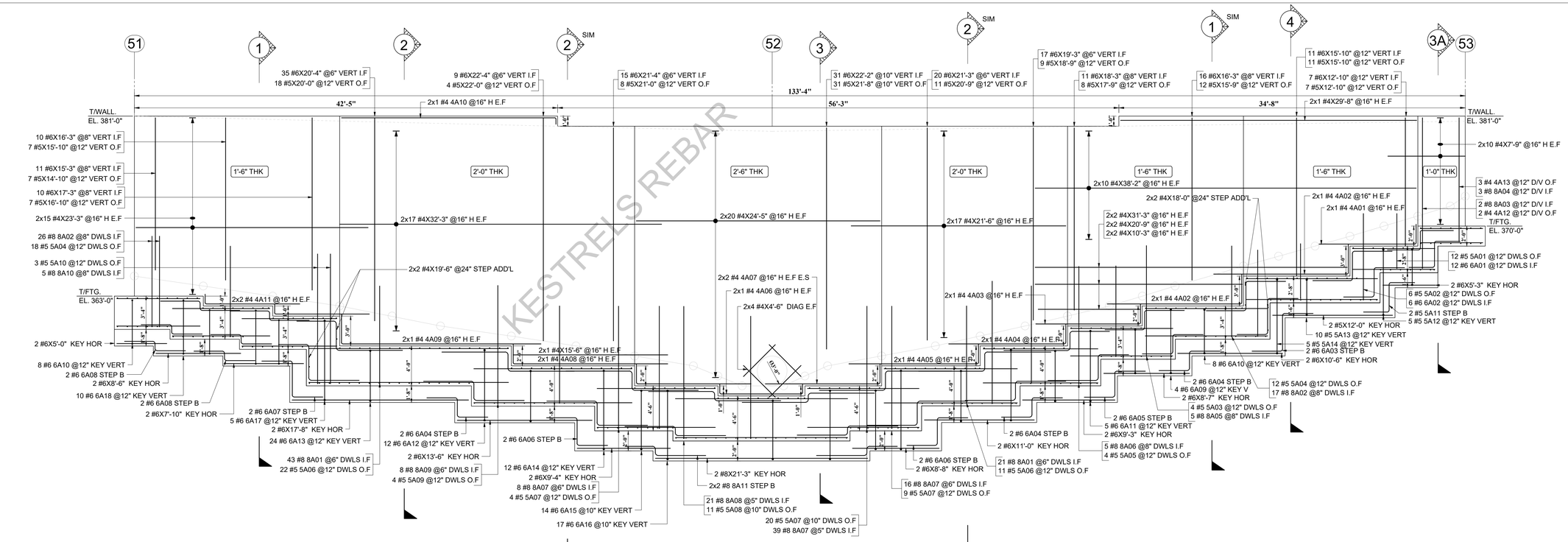

RETAINING WALL-#5B
ELEVATION (A)

SCALE: 3/16" = 1'-0"
REF: S1.1 THRU S3.2

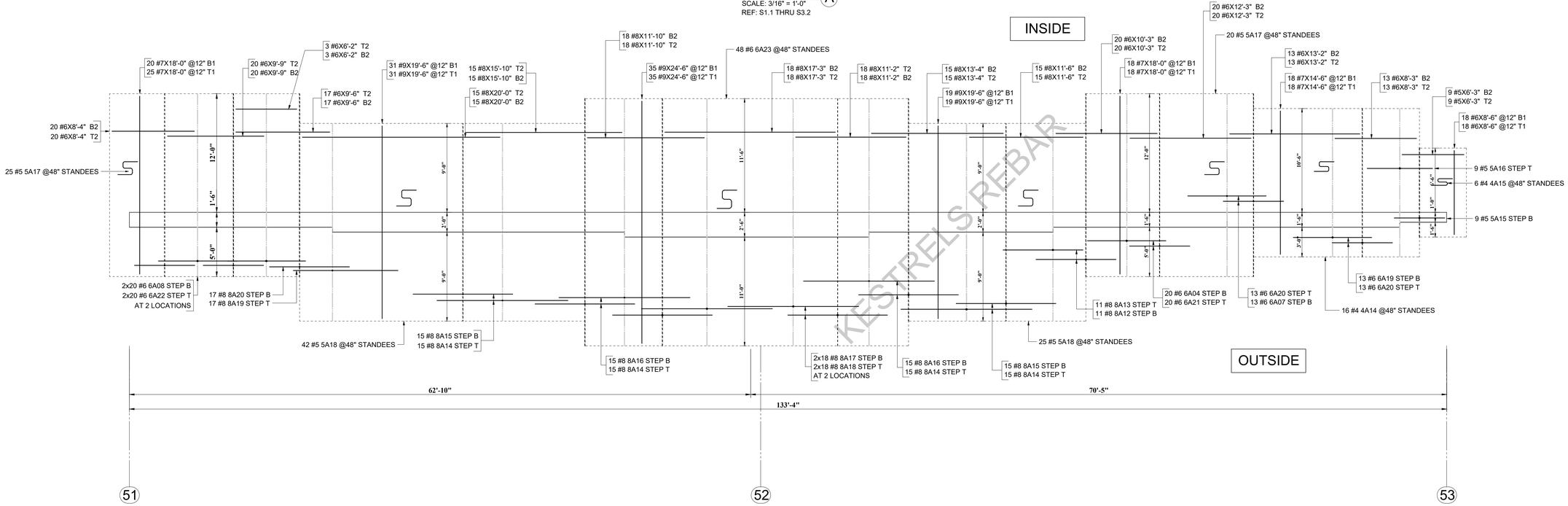

RETAINING WALL-#5B
PLAN VIEW

SCALE: 3/16" = 1'-0"
REF: S1.1 THRU S3.2

REFERENCE DRAWINGS

FOR SECTION AND BBS DETAILS REFER DRAWING R-02

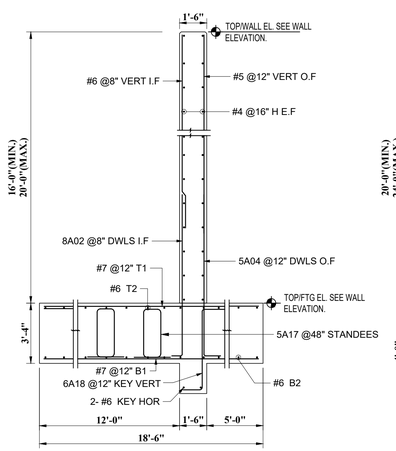

SECTION 1
SCALE: 1/2" = 1'-0"

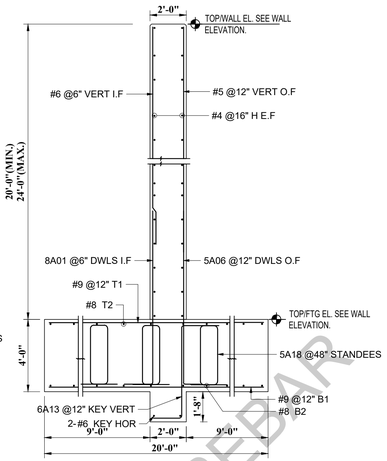

SECTION 2
SCALE: 1/2" = 1'-0"

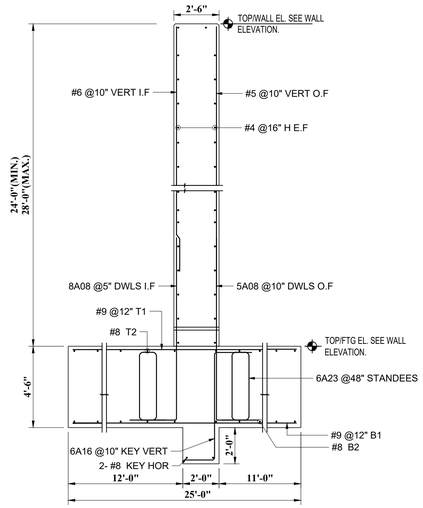

SECTION 3
SCALE: 1/2" = 1'-0"

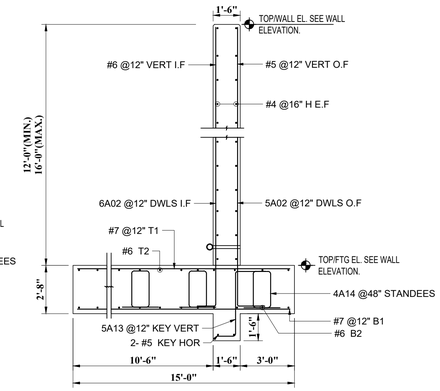

SECTION 4
SCALE: 1/2" = 1'-0"

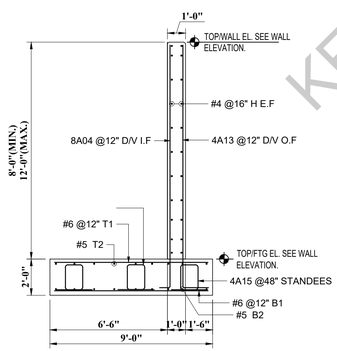

SECTION 3A
SCALE: 1/2" = 1'-0"

REFERENCE DRAWINGS

FOR MAIN WALL ELEVATION DETAILS REFER DRAWING R-01

Release Number: R01

BAR LIST

Bar Mark	Qty	Size	Total Length	Type	'A'	'B'	'C'	'D'	'E'	'F'	'G'	'H'	'J'	'K'	'O'	'R'
8A02	43	#8	10'-5"	2	1'-4"	9'-1"										
8A10	5	#8	14'-4"	2	1'-4"	13'-0"										
5A04	30	#5	9'-11"	2	0'-10"	9'-1"										
5A10	3	#5	13'-10"	2	0'-10"	13'-0"										
8A01	64	#8	11'-1"	2	1'-4"	9'-9"										
5A06	33	#5	10'-7"	2	0'-10"	9'-9"										
8A09	8	#8	13'-2"	2	1'-4"	11'-10"										
5A09	4	#5	12'-8"	2	0'-10"	11'-10"										
8A07	63	#8	13'-7"	2	1'-4"	12'-3"										
5A07	33	#5	13'-1"	2	0'-10"	12'-3"										
8A08	21	#8	14'-7"	2	1'-4"	13'-3"										
5A08	11	#5	14'-1"	2	0'-10"	13'-3"										
8A06	5	#8	13'-1"	2	1'-4"	11'-9"										
5A05	4	#5	12'-7"	2	0'-10"	11'-9"										
5A03	4	#5	11'-11"	2	0'-10"	11'-1"										
8A05	5	#8	12'-5"	2	1'-4"	11'-1"										
5A02	6	#5	9'-6"	2	0'-10"	8'-8"										
6A02	6	#6	10'-2"	2	1'-0"	9'-2"										
5A01	12	#5	5'-10"	2	0'-10"	5'-0"										
6A01	12	#6	6'-6"	2	1'-0"	5'-6"										
4A13	3	#4	13'-1"	2	0'-8"	12'-5"										
8A04	3	#8	13'-9"	2	1'-4"	12'-5"										
8A03	2	#8	16'-5"	2	1'-4"	15'-1"										
4A12	2	#4	15'-9"	2	0'-8"	15'-1"										
4A10	2	#4	22'-2"	2	0'-8"	21'-6"										
4A11	4	#4	10'-6"	17		1'-0"	9'-6"									
4A09	2	#4	23'-0"	17		3'-0"	20'-0"									
4A08	2	#4	17'-6"	17		2'-0"	15'-6"									
4A07	4	#4	13'-6"	17		2'-0"	11'-6"									
4A06	2	#4	10'-4"	17		1'-0"	8'-4"	1'-0"								
4A05	2	#4	15'-0"	17		2'-0"	13'-0"									
4A04	2	#4	13'-9"	17		2'-0"	11'-9"									
4A03	2	#4	12'-6"	17		2'-0"	10'-6"									
4A02	4	#4	16'-6"	17		3'-0"	13'-6"									
4A01	2	#4	11'-9"	17		2'-0"	9'-9"									
6A06	4	#6	9'-0"	20		3'-1"	2'-10"	3'-1"								
6A04	26	#6	8'-2"	20		3'-1"	2'-0"	3'-1"								
6A05	2	#6	8'-10"	20		3'-1"	2'-8"	3'-1"								
6A03	2	#6	10'-0"	20		3'-1"	3'-10"	3'-1"								
5A11	2	#5	8'-2"	20		2'-7"	3'-0"	2'-7"								
6A08	44	#6	7'-2"	20		3'-1"	1'-0"	3'-1"								
6A22	40	#6	9'-0"	20		4'-0"	1'-0"	4'-0"								
8A20	17	#8	11'-10"	20		3'-1"	3'-8"	5'-1"								
8A19	17	#8	13'-8"	20		4'-0"	3'-0"	6'-8"								
8A15	30	#8	12'-2"	20		5'-1"	2'-0"	5'-1"								
8A14	60	#8	15'-4"	20		6'-8"	2'-0"	6'-8"								
8A16	30	#8	12'-8"	20		5'-1"	2'-6"	5'-1"								
8A18	36	#8	14'-4"	20		6'-8"	1'-0"	6'-8"								
8A17	36	#8	11'-2"	20		5'-1"	1'-0"	5'-1"								
8A13	11	#8	12'-8"	20		4'-0"	2'-0"	6'-8"								
8A12	11	#8	10'-10"	20		3'-1"	2'-8"	5'-1"								
6A21	20	#6	10'-0"	20		4'-0"	2'-0"	4'-0"								
6A20	26	#6	11'-0"	20		4'-0"	3'-0"	4'-0"								
6A07	15	#6	9'-10"	20		3'-1"	3'-8"	3'-1"								
6A19	13	#6	9'-2"	20		3'-1"	3'-0"	3'-1"								
5A16	9	#5	8'-8"	20		3'-4"	2'-0"	3'-4"								
5A15	9	#5	7'-10"	20		2'-7"	2'-8"	2'-7"								
6A10	16	#6	9'-5"	20		1'-0"	4'-5"	4'-0"								
6A18	10	#6	10'-5"	20		1'-0"	5'-5"	4'-0"								
6A17	5	#6	13'-0"	20		1'-0"	8'-0"	4'-0"								
6A13	24	#6	10'-7"	20		1'-6"	5'-1"	4'-0"								
6A12	12	#6	12'-1"	20		1'-0"	7'-1"	4'-0"								
6A14	12	#6	12'-11"	20		1'-0"	7'-11"	4'-0"								
6A15	14	#6	10'-11"	20		1'-0"	5'-11"	4'-0"								
6A16	17	#6	11'-11"	20		1'-0"	6'-11"	4'-0"								
6A11	5	#6	12'-7"	20		1'-6"	7'-1"	4'-0"								
6A09	4	#6	11'-5"	20		1'-0"	6'-5"	4'-0"								
5A14	5	#5	11'-9"	20		1'-0"	7'-5"	3'-4"								
5A13	10	#5	7'-11"	20		1'-0"	3'-7"	3'-4"								
5A12	5	#5	10'-11"	20		1'-0"	6'-7"	3'-4"								
8A11	4	#8	9'-2"	20		3'-1"	1'-0"	5'-1"								
5A17	45	#5	9'-6 ¾"	25		1'-6"	2'-9 ¾"	1'-0"	2'-9 ¾"	1'-6"		2'-8 ¾"		1'-4 ¾"		
5A18	67	#5	10'-9 ¾"	25		1'-6"	3'-4 ¾"	1'-0"	3'-4 ¾"	1'-6"		3'-3 ¾"		1'-7 ¾"		
6A23	68	#6	11'-10"	25		1'-6"	3'-11"	1'-0"	3'-11"	1'-6"		3'-9 ¾"		1'-10 ¾"		
4A14	16	#4	8'-2"	25		1'-6"	2'-1"	1'-0"	2'-1"	1'-6"		2'-0 ¾"		1'-0 ¾"		
4A15	6	#4	6'-10 ¾"	25		1'-6"	1'-5 ¾"	1'-0"	1'-5 ¾"	1'-6"		1'-5"		0'-8 ¾"		

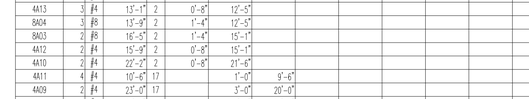

LAP SCHEDULE FOR FDN & WALLS (CLASS-B)		
SIZE	4000 PSI	
	TOP	OTHER
#3	24"	19"
#4	32"	25"
#5	40"	31"
#6	48"	37"
#7	70"	54"
#8	80"	61"
#9	91"	69"
#10	102"	76"
#11	113"	87"

NOTES:-

1. TYPICAL CLEARANCES

FOUNDATION
A). TOP - 2"
B). BOTTOM - 3"
C). END - 3"

WALLS
A). TOP - 2"
B). END - 2"
C). SIDE = 1½"

2. A/E/C PLEASE VERIFY THE ALL CLOUDED ITEMS
3. PROVIDE FIELD CUT AS REQUIRED LOCATIONS
4. BARS TO BE PLACED AT EQUAL SPACING U.O.N.
5. TILT HOOK TO ACCOMODATE THE COVER, IF NEED

ALL BARS ARE ASTM A615 GRADE 60 BLACK

KESTRELS REBAR
KESTRELS REBAR

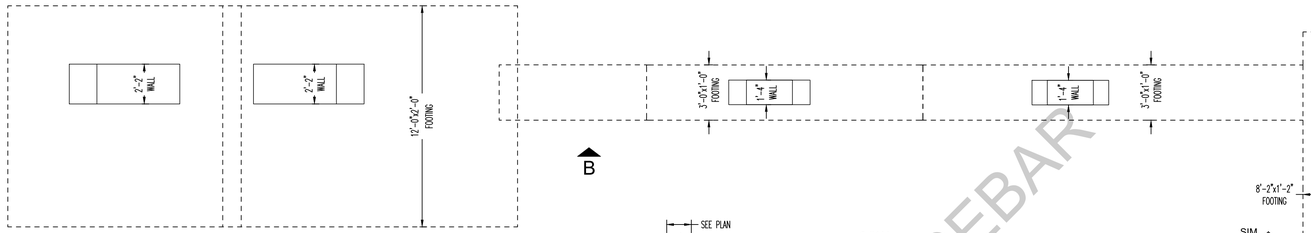

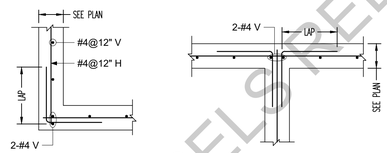

TYPICAL WALL CORNER DETAILS

SCALE: 1/2" = 1'-0"
REF: 4/S5.1 & 5/S5.1

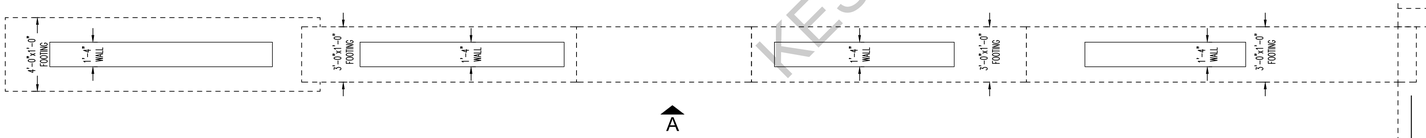

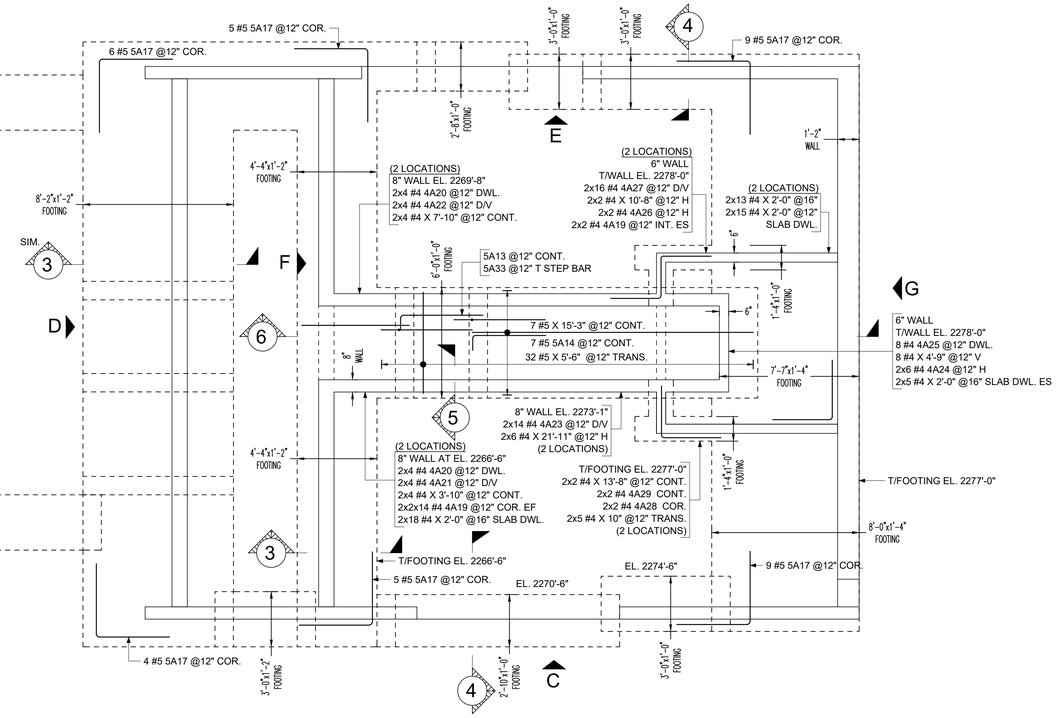

FOUNDATION REINFORCEMENT DETAILS - PLAN

SCALE: 1/4" = 1'-0"
REF: A4, A8, A11, A12

NORTH

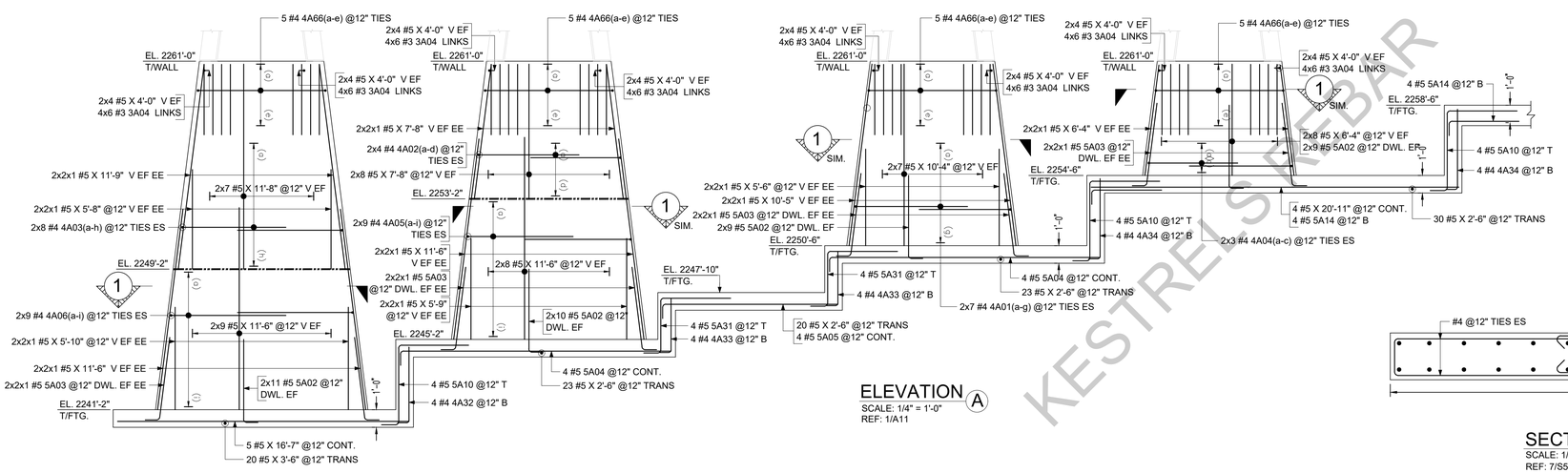

ELEVATION A

SCALE: 1/4" = 1'-0"
REF: 1/A11

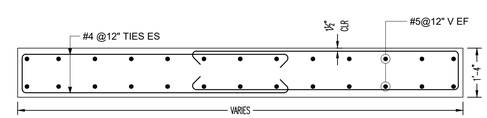

SECTION 1

SCALE: 1/2" = 1'-0"
REF: 7/S5.2

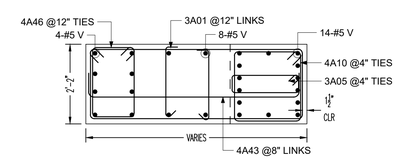

SECTION 2

SCALE: 1/2" = 1'-0"
REF: 7/S5.2

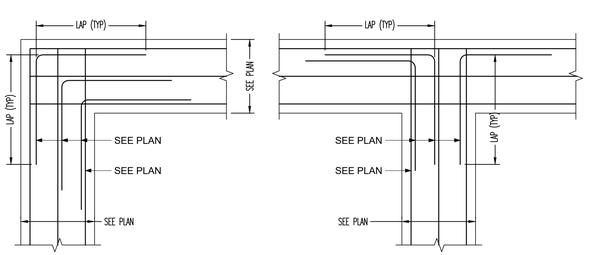

TYP. FOOTING CORNER DETAIL

Scale - 1/2"=1'-0"

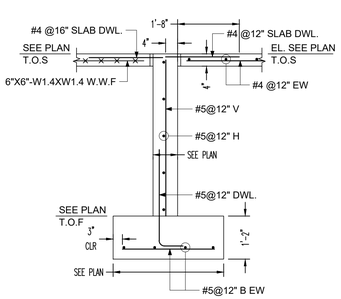

SECTION 3

SCALE: 1/2" = 1'-0"
REF: A5, A6, A16,

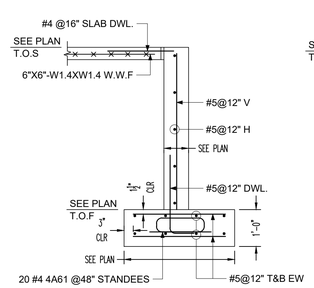

SECTION 4

SCALE: 1/2" = 1'-0"
REF: A16, D1, D16

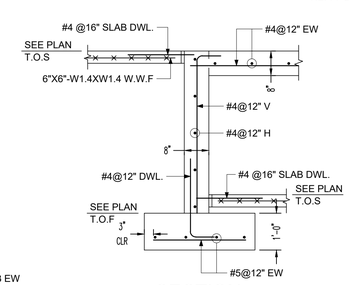

SECTION 5

SCALE: 1/2" = 1'-0"
REF: A3.2

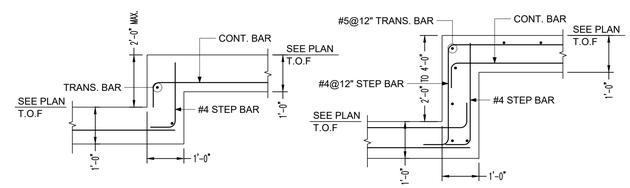

TYP. FOOTING STEP DETAIL

Scale - 1/2"=1'-0"
REF: 7,12/S5.1

PLEASE VERIFY
ALL CLOUDED ITEMS

IT WILL BE UNDERSTOOD THAT ALL CLOUDED ITEMS RETURNED FROM APPROVAL WITHOUT COMMENT ARE CORRECT AS SUBMITTED:

LAP SCHEDULE FOR FOUNDATION (CLASS-B)	
SIZE	3000 PSI
#3	29"
#4	38"
#5	47"
#6	56"

LAP SCHEDULE FOR WALLS (CLASS-B)	
SIZE	4000 PSI
#3	25"
#4	33"
#5	41"
#6	49"

ABBREVIATIONS	
CORNER BAR	COR.
INTERSECTION	INT.
TOP & BOTTOM	T&B
TRANSVERSE	TRANS.
CONTINUOUS	CONT.
VERTICAL	V
HORIZONTAL	H
DOWEL/VERTICAL	D/V
NEAR FACE	NF
FAR FACE	FF
EACH SIDE	ES
TOP OF SLAB	T.O.S

NOTES:-

1. TYPICAL CLEARANCES
FOOTING
A) TOP - 1 1/2"
B) SIDE - 3"
C) BOTTOM - 3"
WALL
D) SIDE - 1 1/2"
E) TOP - 1 1/2"
2. PROVIDE FIELD CUT AS REQUIRED LOCATIONS
3. BARS TO BE PLACED AT EQUAL SPACING U.O.N.
4. TILT HOOK TO ACCOMODATE THE COVER, IF NEED
5. A/E/C PLEASE VERIFY THE ALL CLOUDED ITEMS

ALL BARS ARE ASTM A615 GRADE 60 BLACK

KESTREL STREBAR

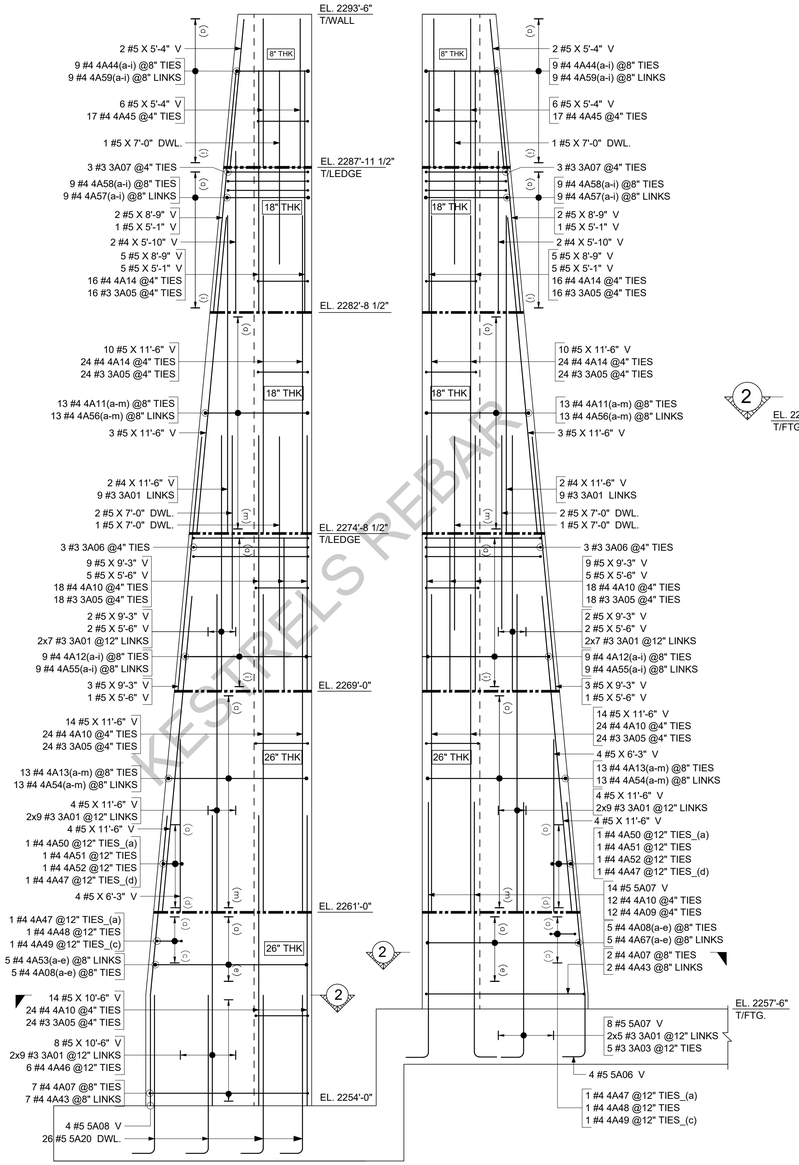

DETAIL A
SCALE: 1/2" = 1'-0"
REF: 1/A12

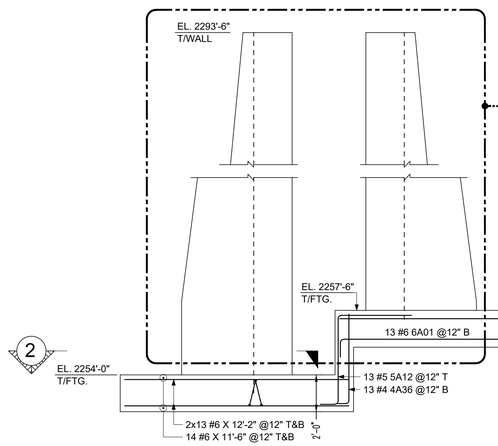

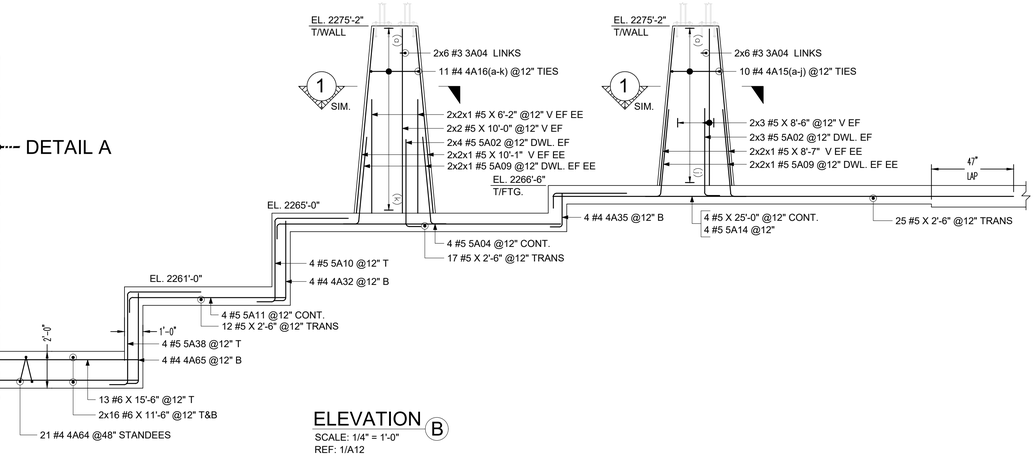

ELEVATION B
SCALE: 1/4" = 1'-0"
REF: 1/A12

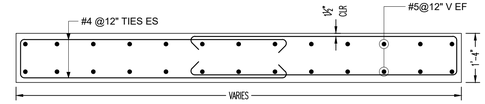

SECTION 1
SCALE: 1/2" = 1'-0"
REF: 7/S5.2

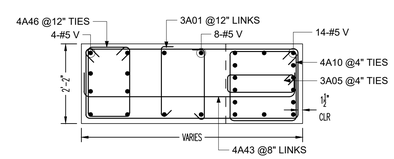

SECTION 2
SCALE: 1/2" = 1'-0"
REF: 7/S5.2

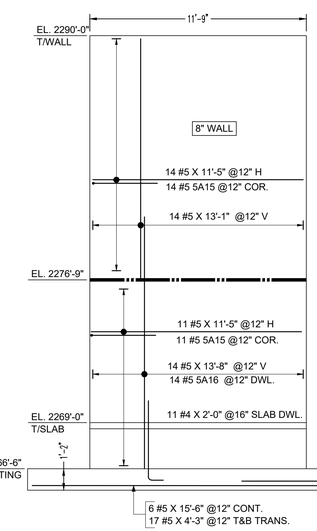

ELEVATION E
SCALE: 1/4" = 1'-0"
REF: A11, A16, D1, D15

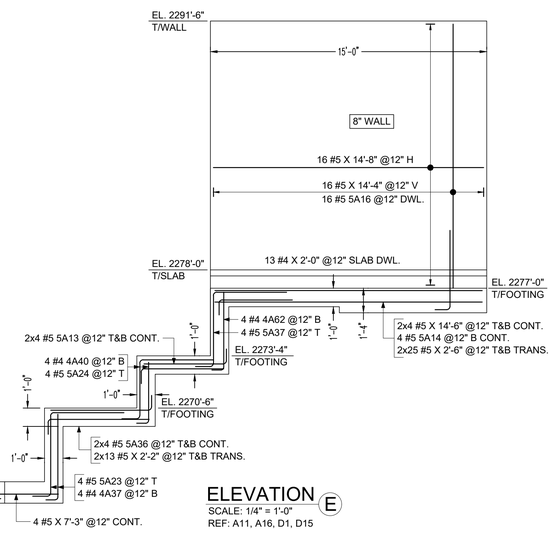

ELEVATION E
SCALE: 1/4" = 1'-0"
REF: A11, A16, D1, D15

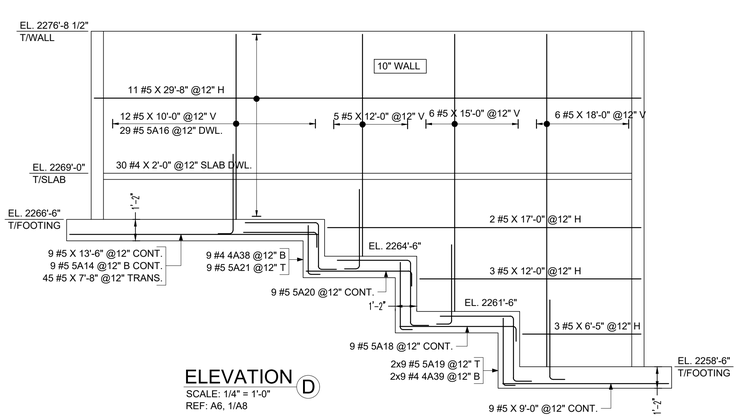

ELEVATION D
SCALE: 1/4" = 1'-0"
REF: A6, 1/A8

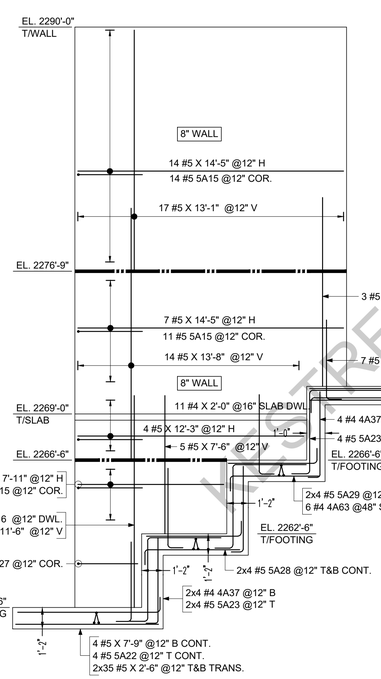

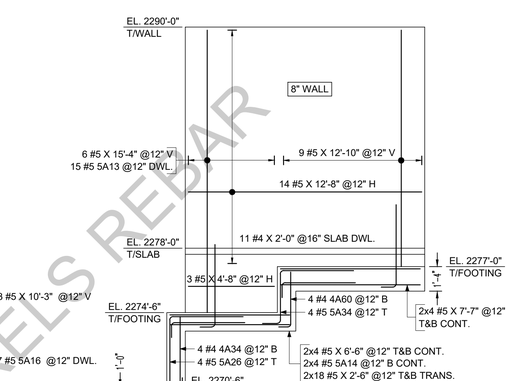

ELEVATION C
SCALE: 1/4" = 1'-0"
REF: A11, A16, D1, D15

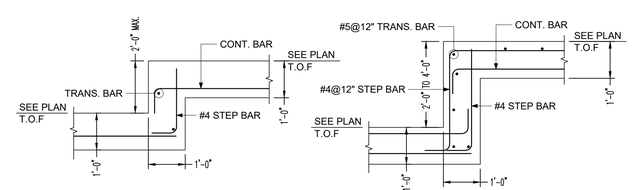

TYP. FOOTING STEP DETAIL
Scale - 1/2"=1'-0"
REF: 7,12/S5.1

PLEASE VERIFY ALL CLOUDED ITEMS

IT WILL BE UNDERSTOOD THAT ALL CLOUDED ITEMS RETURNED FROM APPROVAL WITHOUT COMMENT ARE CORRECT AS SUBMITTED:

LAP SCHEDULE FOR FOUNDATION (CLASS-B)	
SIZE	3000 PSI
#3	29"
#4	38"
#5	47"
#6	56"

LAP SCHEDULE FOR WALLS (CLASS-B)	
SIZE	4000 PSI
#3	25"
#4	33"
#5	41"
#6	49"

ABBREVIATIONS	
CORNER BAR	COR.
INTERSECTION	INT.
TOP & BOTTOM	T&B
TRANSVERSE	TRANS.
CONTINUOUS	CONT.
VERTICAL	V
HORIZONTAL	H
DOWEL/VERTICAL	D/V
NEAR FACE	NF
FAR FACE	FF
EACH SIDE	ES
TOP OF SLAB	T.O.S

NOTES:-

1. TYPICAL CLEARANCES
   FOOTING
   A) TOP - 1 1/2"
   B) SIDE - 3"
   C) BOTTOM - 3"
   WALL
   D) SIDE - 1 1/2"
   E) TOP - 1 1/2"
2. PROVIDE FIELD CUT AS REQUIRED LOCATIONS
3. BARS TO BE PLACED AT EQUAL SPACING U.O.N.
4. TILT HOOK TO ACCOMODATE THE COVER, IF NEED
5. A/E/C PLEASE VERIFY THE ALL CLOUDED ITEMS

ALL BARS ARE ASTM A615 GRADE 60 BLACK

KESTRELS REBAR
KESTRELS REBAR

Drawing Sheet : R-01

BAR LIST

Bar Mark	Qty	Size	Total Length	Type	'A'	'B'	'C'	'D'	'E'	'F'	'G'	'H'	'J'	'K'	'O'	'R'
3A01	110	#3	2'-7"	T9	0'-4"	1'-11"					0'-4"					
3A02	20	#3	1'-4"	T9	0'-4"	0'-8"					0'-4"					
3A03	5	#3	6'-10"	T1	0'-4"	1'-2"	1'-11"	1'-2"	1'-11"		0'-4"					
3A04	216	#3	1'-9"	T9	0'-4"	1'-1"					0'-4"					
3A05	188	#3	5'-4"	T1	0'-4"	1'-10"	0'-6"	1'-10"	0'-6"		0'-4"					
3A06	6	#3	12'-10"	T1	0'-4"	1'-11"	4'-2"	1'-11"	4'-2"		0'-4"					
3A07	6	#3	10'-4"	T1	0'-4"	1'-11"	2'-11"	1'-11"	2'-11"		0'-4"					
4A01a	2	#4	12'-8"	S3	0'-4 ½"	5'-5"	1'-1"	5'-5"			0'-4 ½"	0'-3"				
Varies To																
4A01g	2	#4	14'-4"	S3	0'-4 ½"	6'-3"	1'-1"	6'-3"			0'-4 ½"	0'-3"				
4A02a	2	#4	12'-8"	S3	0'-4 ½"	5'-5"	1'-1"	5'-5"			0'-4 ½"	0'-3"				
Varies To																
4A02d	2	#4	13'-6"	S3	0'-4 ½"	5'-10"	1'-1"	5'-10"			0'-4 ½"	0'-3"				
4A03a	2	#4	12'-8"	S3	0'-4 ½"	5'-5"	1'-1"	5'-5"			0'-4 ½"	0'-3"				
Varies To																
4A03h	2	#4	14'-6"	S3	0'-4 ½"	6'-4"	1'-1"	6'-4"			0'-4 ½"	0'-3"				
4A04a	2	#4	12'-8"	S3	0'-4 ½"	5'-5"	1'-1"	5'-5"			0'-4 ½"	0'-3"				
Varies To																
4A04c	2	#4	13'-4"	S3	0'-4 ½"	5'-9"	1'-1"	5'-9"			0'-4 ½"	0'-3"				
4A05a	2	#4	13'-6"	S3	0'-4 ½"	5'-10"	1'-1"	5'-10"			0'-4 ½"	0'-3"				
Varies To																
4A05i	2	#4	15'-6"	S3	0'-4 ½"	6'-10"	1'-1"	6'-10"			0'-4 ½"	0'-3"				
4A06a	2	#4	14'-6"	S3	0'-4 ½"	6'-4"	1'-1"	6'-4"			0'-4 ½"	0'-3"				
Varies To																
4A06i	2	#4	16'-4"	S3	0'-4 ½"	7'-3"	1'-1"	7'-3"			0'-4 ½"	0'-3"				
4A07	9	#4	16'-1"	T1	0'-4 ½"	1'-11"	5'-9"	1'-11"	5'-9"		0'-4 ½"					
4A08a	2	#4	15'-5"	T1	0'-4 ½"	1'-11"	5'-5"	1'-11"	5'-5"		0'-4 ½"					
Varies To																
4A08e	2	#4	16'-0"	T1	0'-4 ½"	1'-11"	5'-8"	1'-11"	5'-9"		0'-4 ½"					
4A09	12	#4	5'-5"	T1	0'-4 ½"	1'-10"	0'-6"	1'-10"	0'-6"		0'-4 ½"					
4A10	120	#4	8'-3"	T1	0'-4 ½"	1'-10"	1'-11"	1'-10"	1'-11"		0'-4 ½"					
4A11a	2	#4	10'-1"	T1	0'-4 ½"	1'-3"	3'-5"	1'-3"	3'-5"		0'-4 ½"					
Varies To																
4A11m	2	#4	13'-10"	T1	0'-4 ½"	1'-3"	4'-2"	1'-11"	5'-9"		0'-4 ½"					
4A12a	2	#4	12'-11"	T1	0'-4 ½"	1'-11"	4'-2"	1'-11"	4'-2"		0'-4 ½"					
Varies To																
4A12i	2	#4	15'-0"	T1	0'-4 ½"	1'-11"	4'-8"	1'-11"	5'-9"		0'-4 ½"					
4A13a	2	#4	13'-11"	T1	0'-4 ½"	1'-11"	4'-8"	1'-11"	4'-8"		0'-4 ½"					
Varies To																
4A13m	2	#4	15'-9"	T1	0'-4 ½"	1'-11"	5'-5"	1'-11"	5'-9"		0'-4 ½"					
4A14	80	#4	6'-11"	T1	0'-4 ½"	1'-3"	1'-10"	1'-3"	1'-10"		0'-4 ½"					
4A15a	1	#4	7'-6"	T1	0'-4 ½"	1'-1"	2'-3 ½"	1'-1"	2'-3 ½"		0'-4 ½"					
Varies To																
4A15j	1	#4	10'-11"	T1	0'-4 ½"	1'-1"	3'-10 ½"	1'-1"	4'-1 ½"		0'-4 ½"					
4A16a	1	#4	7'-6"	T1	0'-4 ½"	1'-1"	2'-3 ½"	1'-1"	2'-3 ½"		0'-4 ½"					
Varies To																
4A16k	1	#4	11'-2"	T1	0'-4 ½"	1'-1"	4'-1 ½"	1'-1"	4'-1 ½"		0'-4 ½"					
4A19	152	#4	5'-6"	17		2'-9"	2'-9"									
4A20	16	#4	4'-8"	2	0'-8"	4'-0"										
4A21	8	#4	11'-7"	2	0'-8"	10'-11"										
4A22	8	#4	8'-5"	2	0'-8"	7'-9"										
4A23	28	#4	6'-4"	2	0'-8"	5'-0"					0'-8"					
4A24	12	#4	6'-9"	17		2'-9"	4'-0"									
4A25	8	#4	2'-9"	2	0'-8"	2'-1"										
4A26	4	#4	7'-10"	20		2'-9"	2'-4"	2'-9"								
4A27	32	#4	2'-2"	2	0'-8"	1'-6"										
4A28	4	#4	6'-6"	17		3'-3"	3'-3"									
4A29	4	#4	6'-1"	17		2'-10"	3'-3"									
4A30	5	#4	4'-3"	17		1'-0"	3'-3"									
4A32	8	#4	5'-0"	2	0'-8"	4'-4"										
4A33	8	#4	3'-9"	2	0'-8"	3'-1"										
4A34	12	#4	5'-3"	2	0'-8"	4'-7"										
4A35	4	#4	2'-6"	2	0'-8"	1'-10"										
4A36	13	#4	5'-6 ½"	2	0'-8"	4'-10 ½"										
4A37	16	#4	5'-4"	2	0'-8"	4'-8"										
4A38	9	#4	3'-4"	2	0'-8"	2'-8"										
4A39	18	#4	4'-4"	2	0'-8"	3'-8"										
4A40	4	#4	4'-0"	2	0'-8"	3'-4"										
4A41	7	#4	4'-7"	2	0'-8"	3'-11"										
4A42	33	#4	2'-11"	2	0'-8"	2'-3"										
4A43	9	#4	7'-1"	17		0'-8"	5'-9"	0'-8"								
4A44a	2	#4	6'-5"	T1	0'-4 ½"	0'-5"	2'-5"	0'-5"	2'-5"		0'-4 ½"					
Varies To																
4A44i	2	#4	11'-9"	T1	0'-4 ½"	0'-5"	2'-11"	1'-11"	5'-9"		0'-4 ½"					
4A45	34	#4	5'-3"	T1	0'-4 ½"	0'-5"	1'-10"	0'-5"	1'-10"		0'-4 ½"					
4A46	6	#4	6'-11"	T1	0'-4 ½"	1'-2"	1'-11"	1'-2"	1'-11"		0'-4 ½"					
4A47	4	#4	6'-3"	T1	0'-4 ½"	0'-10"	1'-11"	0'-10"	1'-11"		0'-4 ½"					
4A48	2	#4	6'-5"	T1	0'-4 ½"	0'-11"	1'-11"	0'-11"	1'-11"		0'-4 ½"					
4A49	2	#4	6'-7"	T1	0'-4 ½"	1'-0"	1'-11"	1'-0"	1'-11"		0'-4 ½"					
4A50	2	#4	5'-9"	T1	0'-4 ½"	0'-7"	1'-11"	0'-7"	1'-11"		0'-4 ½"					
4A51	2	#4	5'-11"	T1	0'-4 ½"	0'-8"	1'-11"	0'-8"	1'-11"		0'-4 ½"					
4A52	2	#4	6'-1"	T1	0'-4 ½"	0'-9"	1'-11"	0'-9"	1'-11"		0'-4 ½"					
4A53a	1	#4	6'-9"	17		0'-8"	5'-5"	0'-8"								
Varies To																
4A53e	1	#4	9'-6"	17		1'-11"	5'-8"	1'-11"								
4A54a	2	#4	6'-0"	17		0'-8"	4'-8"	0'-8"								
Varies To																
4A54m	2	#4	6'-9"	17		0'-8"	5'-5"	0'-8"								
4A55a	2	#4	5'-6"	17		0'-8"	4'-2"	0'-8"								
Varies To																
4A55i	2	#4	6'-0"	17		0'-8"	4'-8"	0'-8"								
4A56a	2	#4	4'-9"	17		0'-8"	3'-5"	0'-8"								
Varies To																
4A56m	2	#4	5'-6"	17		0'-8"	4'-2"	0'-8"								
4A57a	2	#4	4'-3"	17		0'-8"	2'-11"	0'-8"								
Varies To																
4A57i	2	#4	4'-9"	17		0'-8"	3'-5"	0'-8"								
4A58a	2	#4	9'-1"	T1	0'-4 ½"	1'-3"	2'-11"	1'-3"	2'-11"		0'-4 ½"					
Varies To																
4A58i	2	#4	13'-1"	T1	0'-4 ½"	1'-3"	3'-5"	1'-11"	5'-9"		0'-4 ½"					
4A59a	2	#4	3'-3"	17		0'-5"	2'-5"	0'-5"								
Varies To																
4A59i	2	#4	4'-3"	17		0'-8"	2'-11"	0'-8"								
4A60	4	#4	3'-8"	2	0'-8"	3'-0"										
4A61	20	#4	5'-2"	25		1'-6"	0'-5"	1'-4"	0'-5"	1'-6"		0'-5"		0'-2 ½"		
4A62	4	#4	4'-11"	2	0'-8"	4'-3"										
4A63	6	#4	5'-6"	25		1'-6"	0'-7"	1'-4"	0'-7"	1'-6"		0'-7"		0'-3 ½"		
4A64	21	#4	6'-9 ½"	25		1'-6"	1'-4 ¾"	1'-0"	1'-4 ¾"	1'-6"		1'-4 ½"		0'-8 ¼"		

Drawing Sheet : R-01

BAR LIST

Bar Mark	Qty	Size	Total Length	Type	'A'	'B'	'C'	'D'	'E'	'F'	'G'	'H'	'J'	'K'	'O'	'R'
4A65	4	#4	5'-7"	2	0'-8"	4'-11"										
4A66a	4	#4	16'-8"	T1	0'-4 ½"	1'-1"	6'-10 ½"	1'-1"	6'-10 ½"		0'-4 ½"					
Varies To																
4A66e	4	#4	18'-5"	T1	0'-4 ½"	1'-1"	7'-9"	1'-1"	7'-9"		0'-4 ½"					
4A67a	1	#4	6'-9"	17		0'-8"	5'-5"	0'-8"								
Varies To																
4A67e	1	#4	7'-0"	17		0'-8"	5'-8"	0'-8"								
4A68	7	#4	4'-6"	2	0'-8"	3'-10"										
5A02	92	#5	5'-7"	2	0'-10"	4'-9"										
5A03	16	#5	5'-6 ¾"	3		0'-10"	4'-8 ¾"					4'-8 ¾"		0'-6 ¾"	1'-4 ½"	
5A04	12	#5	16'-3"	2	0'-10"	15'-5"										
5A05	4	#5	10'-10"	2	0'-10"	10'-0"										
5A06	4	#5	10'-1"	4	0'-10"	2'-3"	7'-0"					0'-8 ½"		6'-11 ¾"	9'-2 ¾"	
5A07	22	#5	10'-1"	2	0'-10"	9'-3"										
5A08	4	#5	10'-6"	3		4'-0"	6'-6"					0'-7 ¾"		6'-5 ¾"	10'-5 ¾"	
5A09	8	#5	5'-6 ¾"	3		0'-10"	4'-8 ¾"					4'-8 ¾"		0'-4 ¾"	1'-2 ¾"	
5A10	16	#5	9'-7"	20		4'-0"	4'-7"	1'-0"								
5A11	4	#5	9'-4"	2	0'-10"	8'-6"										
5A12	13	#5	9'-10 ½"	20		4'-0"	4'-10 ½"	1'-0"								
5A13	30	#5	5'-4"	2	0'-10"	4'-6"										
5A14	48	#5	4'-10"	2	0'-10"	4'-0"										
5A15	54	#5	7'-0"	17		3'-6"	3'-6"									
5A16	135	#5	5'-2"	2	0'-10"	4'-4"										
5A17	38	#5	8'-0"	17		4'-0"	4'-0"									
5A18	9	#5	7'-2"	2	0'-10"	6'-4"										
5A19	18	#5	8'-7"	20		1'-0"	3'-7"	4'-0"								
5A20	35	#5	6'-7"	2	0'-10"	5'-9"										
5A21	9	#5	7'-7"	20		1'-0"	2'-7"	4'-0"								
5A22	4	#5	8'-7"	2	0'-10"	7'-9"										
5A23	16	#5	9'-7"	20		1'-0"	4'-7"	4'-0"								
5A24	4	#5	8'-3"	20		1'-0"	3'-3"	4'-0"								
5A26	4	#5	9'-5"	20		1'-0"	4'-5"	4'-0"								
5A27	5	#5	6'-9"	17		3'-3"	3'-6"									
5A28	8	#5	6'-0"	2	0'-10"	5'-2"										
5A29	8	#5	5'-8"	2	0'-10"	4'-10"										
5A31	8	#5	8'-2"	20		4'-0"	3'-2"	1'-0"								
5A32	7	#5	8'-10"	20		4'-0"	3'-10"	1'-0"								
5A33	7	#5	8'-11"	20		4'-0"	3'-11"	1'-0"								
5A34	4	#5	7'-11"	20		1'-0"	2'-11"	4'-0"								
5A36	8	#5	6'-4"	2	0'-10"	5'-6"										
5A37	4	#5	9'-1"	20		1'-0"	4'-1"	4'-0"								
5A38	4	#5	10'-1"	20		4'-0"	5'-1"	1'-0"								
6A01	13	#6	16'-6"	2	1'-0"	15'-6"										

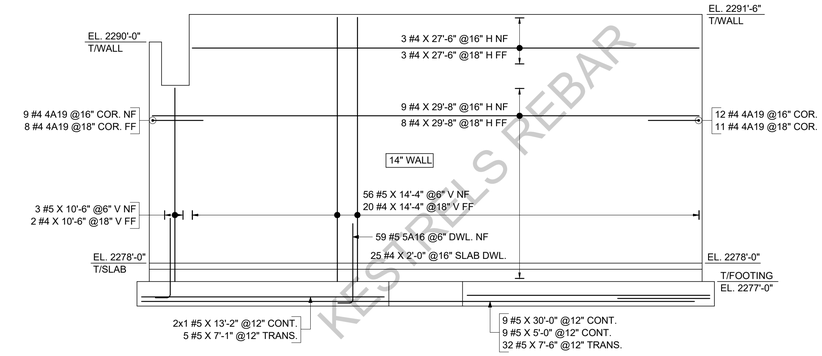

ELEVATION G
SCALE: 1/4" = 1'-0"
REF: A11, A16, D1, D15

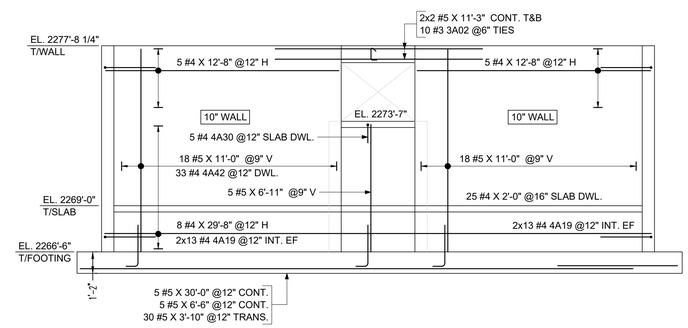

ELEVATION F
SCALE: 1/4" = 1'-0"
REF: A5, A3.1

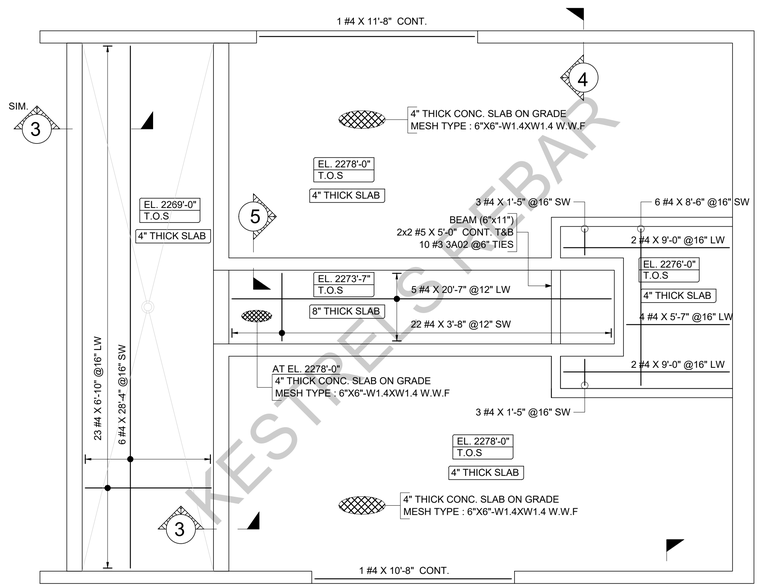

SOG REINFORCEMENT DETAILS - PLAN
Scale - 1/4"=1'-0"
REF: A3, A4, A5

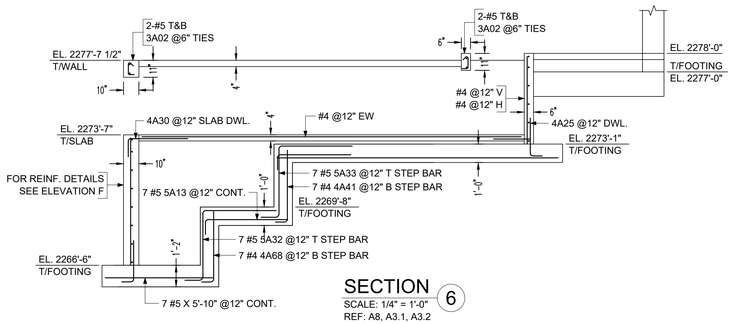

SECTION 6
SCALE: 1/4" = 1'-0"
REF: A8, A3.1, A3.2

MESH QUANTITY SCHEDULE			
DESCRIPTION	SHEET SIZE	QUANTITY	REMARKS
6"X6"-W1.4XW1.4 W.W.F	8'-0" X 20'-0"	6 SHEETS (15% LAP)	4" THK SLAB ON GRADE

PLEASE VERIFY
ALL CLOUDED ITEMS
IT WILL BE UNDERSTOOD THAT ALL CLOUDED ITEMS RETURNED FROM APPROVAL WITHOUT COMMENT ARE CORRECT AS SUBMITTED:

LAP SCHEDULE FOR FOUNDATION (CLASS-B)	
SIZE	3000 PSI
#3	29"
#4	38"
#5	47"
#6	56"

LAP SCHEDULE FOR WALLS (CLASS-B)	
SIZE	4000 PSI
#3	25"
#4	33"
#5	41"
#6	49"

ABBREVIATIONS	
CORNER BAR	COR.
INTERSECTION	INT.
TOP & BOTTOM	T&B
TRANSVERSE	TRANS.
CONTINUOUS	CONT.
VERTICAL	V
HORIZONTAL	H
DOWEL/VERTICAL	D/V
NEAR FACE	NF
FAR FACE	FF
EACH SIDE	ES
TOP OF SLAB	T.O.S

NOTES:-
1. TYPICAL CLEARANCES
FOOTING
A) TOP - 1 1/2"
B) SIDE - 3"
C) BOTTOM - 3"
WALL
D) SIDE - 1 1/2"
E) TOP - 1 1/2"
2. PROVIDE FIELD CUT AS REQUIRED LOCATIONS
3. BARS TO BE PLACED AT EQUAL SPACING U.O.N.
4. TILT HOOK TO ACCOMODATE THE COVER, IF NEED
5. A/E/C PLEASE VERIFY THE ALL CLOUDED ITEMS

ALL BARS ARE ASTM A615 GRADE 60 BLACK

KESTRELS REBAR

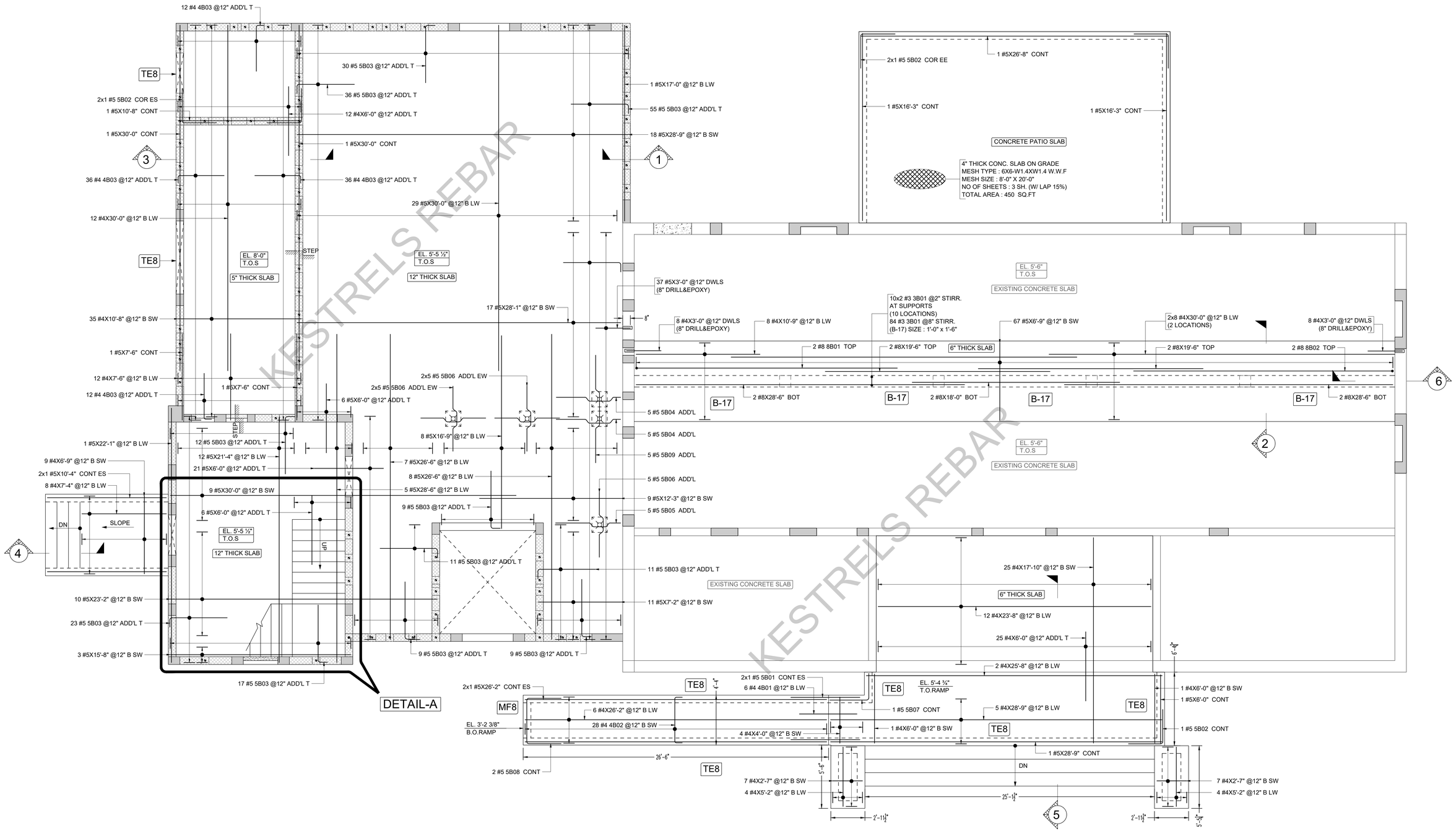

SLAB ON GRADE & STAIR REINFORCEMENT - PLAN

SCALE: 1/4" = 1'-0"
REF: S100

N NORTH

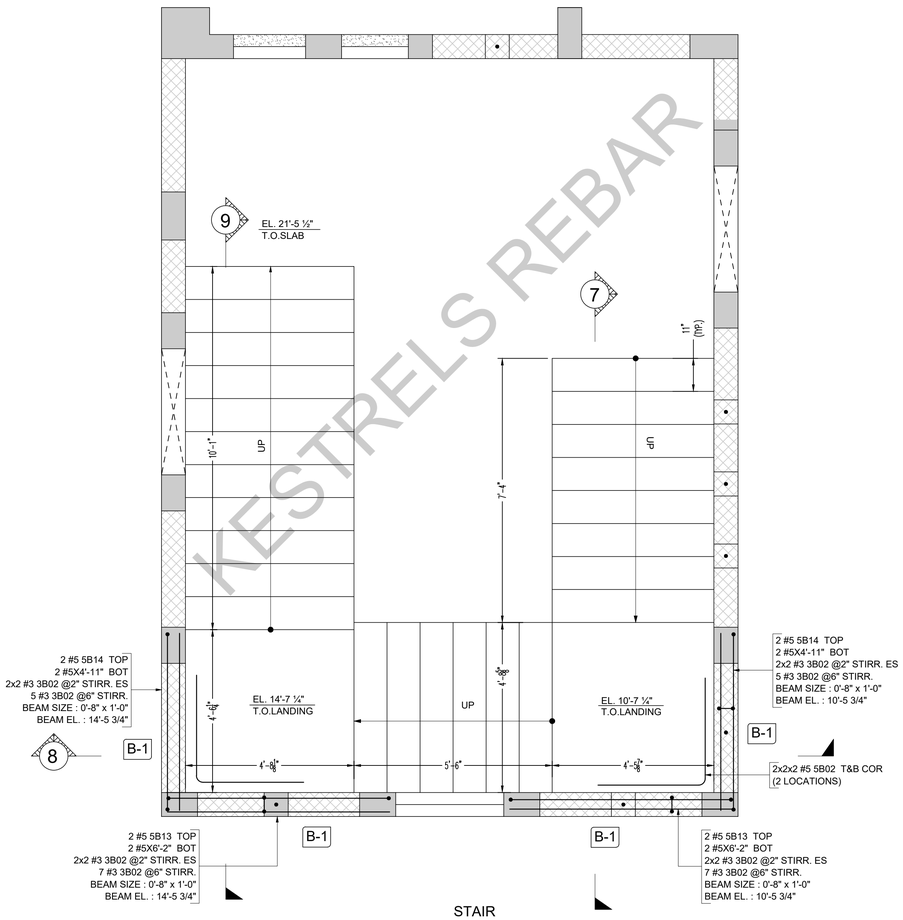

STAIR

DETAIL-A

SCALE: 1/2" = 1'-0"
REF: S203 & A5.1.4

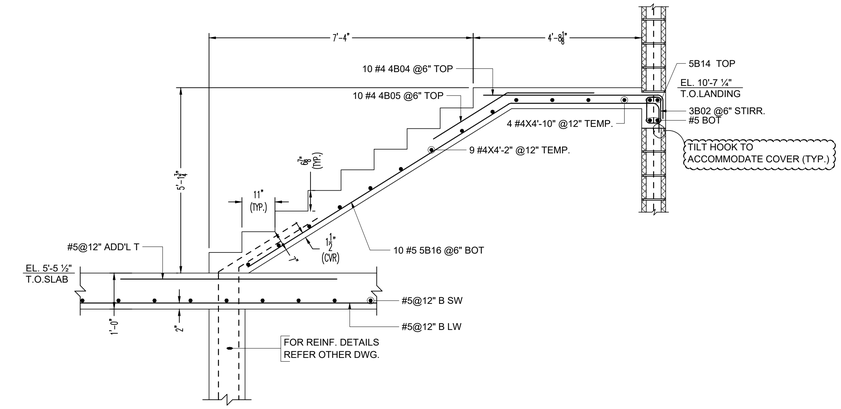

SECTION 7

SCALE: 1/2" = 1'-0"
REF: S203 & A5.1.4

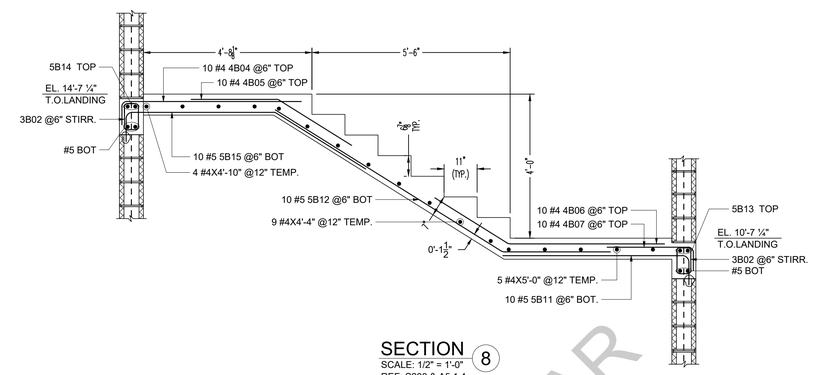

SECTION 8

SCALE: 1/2" = 1'-0"
REF: S203 & A5.1.4

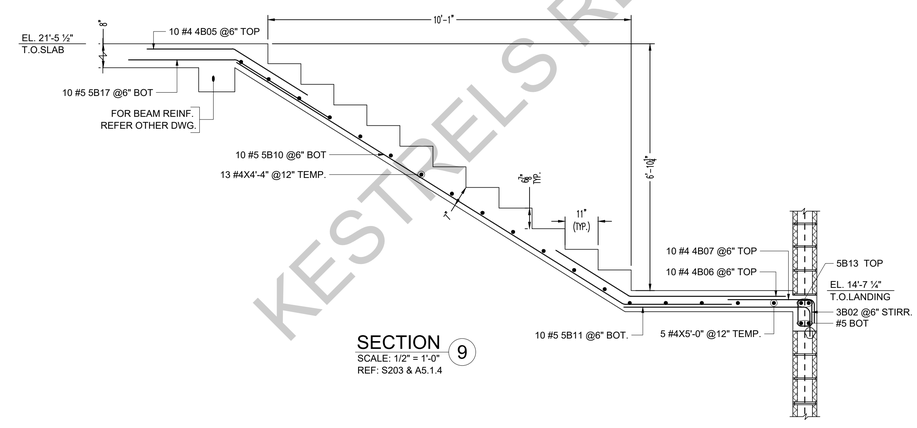

SECTION 9

SCALE: 1/2" = 1'-0"
REF: S203 & A5.1.4

KESTRELS REBAR
KESTRELS REBAR

KESTRELS REBAR

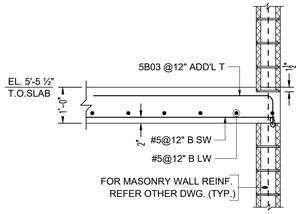

SECTION 1
SCALE: 1/2" = 1'-0"
REF: 1/S200

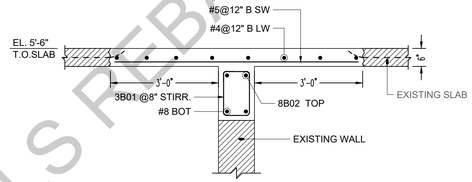

SECTION 2
SCALE: 1/2" = 1'-0"
REF: 5/S202

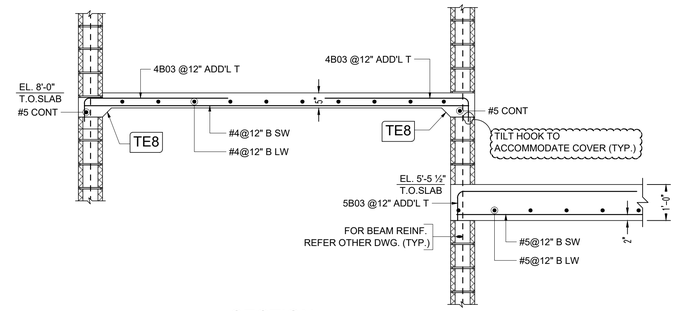

SECTION 3
SCALE: 1/2" = 1'-0"
REF: 3/S200

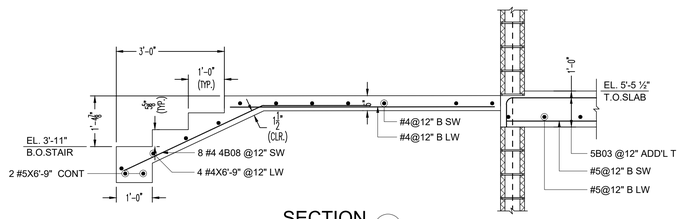

SECTION 4
SCALE: 1/2" = 1'-0"
REF: 3/S202

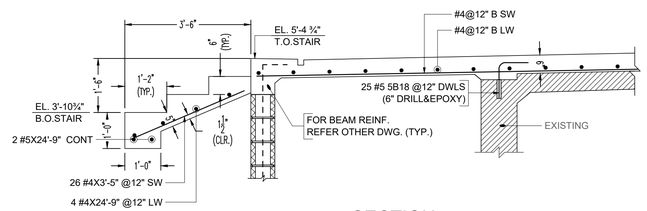

SECTION 5
SCALE: 1/2" = 1'-0"
REF: 3/S202

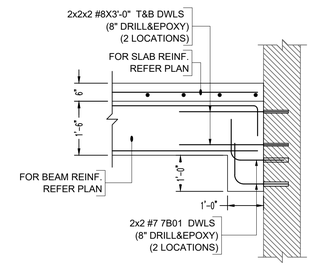

SECTION 6
SCALE: 1/2" = 1'-0"
REF: S303

Drawing Sheet : R03 — BENDING DETAILS

Bar Mark	Qty	Size	Total Length	Type	'A'	'B'	'C'	'D'	'E'	'F'	'G'	'H'	'J'	'K'	'O'	'R'
4B01	6	#4	4'-11 ¾"	3		2'-6"	2'-5 ¾"					0'-2 ¾"		2'-5 ¾"	4'-11 ¾"	
5B01	2	#5	5'-11 ¾"	3		3'-0"	2'-11 ¾"					0'-3 ½"		2'-11 ¾"	5'-11 ¾"	
5B02	13	#5	6'-0"	17		3'-0"	3'-0"									
5B03	222	#5	5'-10"	2	0'-10"	5'-0"										
5B04	10	#5	6'-0"	3		2'-7"	0'-5 ¾"	1'-10 ½"	0'-5 ¾"	0'-8"		0'-4 ½"		0'-2 ¾"	5'-7"	
5B05	5	#5	6'-0 ½"	3		3'-0"	0'-5 ¾"	1'-2"	0'-5 ¾"	1'-0"		0'-4 ½"		0'-2 ¾"	5'-7 ½"	
5B06	25	#5	6'-0 ½"	3		2'-0"	0'-5 ¾"	1'-2"	0'-5 ¾"	2'-0"		0'-4 ½"		0'-2 ¾"	5'-7 ½"	
5B07	1	#5	5'-9"	17		2'-4"	3'-5"									
5B08	2	#5	10'-0"	17		3'-0"	4'-0"	3'-0"								
4B02	28	#4	5'-4"	2	0'-8"	4'-0"					0'-8"					
5B09	5	#5	9'-9"	3		3'-0"	0'-5 ¾"	2'-10 ½"	0'-5 ¾"	3'-0"		0'-4 ½"		0'-2 ¾"	9'-4"	
3B01	104	#3	4'-8"	T2	0'-4"	0'-9"	1'-3"	0'-9"	1'-3"		0'-4"					
8B01	2	#8	24'-0"	2	1'-4"	22'-8"										
8B02	2	#8	23'-10"	2	1'-4"	22'-6"										
4B03	96	#4	4'-8"	2	0'-8"	4'-0"										
5B10	10	#5	15'-7 ¾"	3		3'-0"	12'-7 ¾"					6'-9"		10'-8 ½"	13'-8 ½"	
5B11	20	#5	6'-0 ¾"	2	0'-10"	5'-2 ¾"										
5B12	10	#5	10'-5"	3		3'-0"	7'-5"					3'-11 ¾"		6'-3 ¾"	9'-3 ¾"	
4B04	20	#4	5'-8"	2	0'-8"	5'-0"										
5B13	4	#5	7'-10"	2	0'-10"	6'-2"					0'-10"					
3B02	40	#3	3'-0"	T2	0'-4"	0'-5"	0'-9"	0'-5"	0'-9"		0'-4"					
5B14	4	#5	6'-7"	2	0'-10"	4'-11"					0'-10"					
7B01	4	#7	2'-8"	2	1'-2"	1'-6"										
5B15	10	#5	7'-11 ½"	4	0'-10"	4'-2"	2'-11 ½"					1'-6 ¾"		2'-6 ¾"	6'-8 ¾"	
5B16	10	#5	13'-6 ¾"	4	0'-10"	4'-2"	8'-6 ¾"					4'-6 ½"		7'-3 ¾"	11'-5 ¾"	
4B05	30	#4	4'-9 ¾"	3		2'-5"	2'-4 ¾"					1'-3 ¾"		2'-0 ¾"	4'-5 ¾"	
4B06	20	#4	6'-8 ¾"	3		4'-4"	2'-4 ¾"					1'-3 ¾"		2'-0 ¾"	6'-4 ¾"	
5B17	10	#5	5'-11 ¾"	3		3'-0"	2'-11 ¾"					1'-7 ½"		2'-6"	5'-6"	
4B07	20	#4	3'-1"	2	0'-8"	2'-5"										
5B18	25	#5	1'-10"	2	0'-10"	1'-0"										
4B08	8	#4	7'-3"	3		3'-0"	4'-3"					1'-10"		3'-10"	6'-10"	

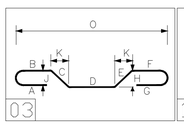

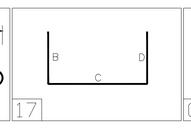

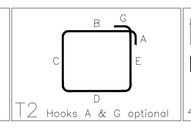

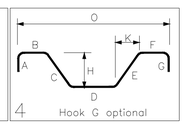

LAP SCHEDULE FOR BEAM (CLASS-B)		
SIZE	5000 PSI	
	TOP	OTHER
#3	22"	17"
#4	29"	22"
#5	36"	28"
#6	43"	33"
#7	64"	49"
#8	72"	55"
#9	82"	63"
#10	91"	70"
#11	101"	78"

ENGINEER CONFIRM
THE LAP SCHEDULE

LAP SCHEDULE FOR SLAB (CLASS-B)		
SIZE	3000 PSI	
	TOP	OTHER
#3	28"	22"
#4	37"	29"
#5	47"	36"
#6	56"	43"
#7	81"	63"
#8	93"	72"
#9	105"	81"
#10	118"	91"
#11	131"	101"

NOTES:-

1. TYPICAL CLEARANCES
   A). BEAM STIRRUPS - 1 ½"
   B). END - 2"
2. A/E/C PLEASE VERIFY THE ALL CLOUDED ITEMS
3. PROVIDE FIELD CUT AS REQUIRED LOCATIONS
4. BARS TO BE PLACED AT EQUAL SPACING U.O.N.
5. TILT HOOK TO ACCOMODATE THE COVER, IF NEED

ALL BARS ARE ASTM A615 GRADE 60 BLACK

KESTRELS REBAR

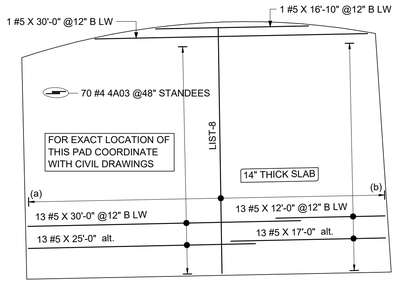

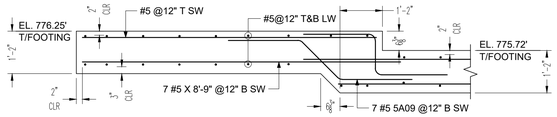

SECTION 3
SCALE: 1/2" = 1'-0"
REF: 6/00S-02

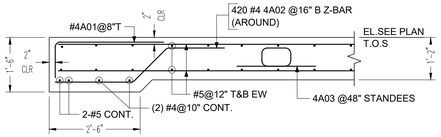

SECTION 1
SCALE: 1/2" = 1'-0"
REF: 00S-05A

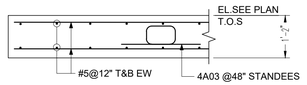

SECTION 2
SCALE: 1/2" = 1'-0"
REF: 00S-05A

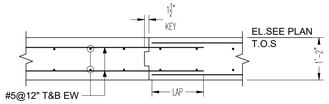

KEYED CONSTRUCTION JOINT (KCJ)
SCALE: 1/2" = 1'-0"
REF: 9/00S-02

LIST-1
1 #5 X 5'-9" @12" B LW_(a)
1 #5 X 15'-0" @12" alt.
1 #5 X 13'-6" @12" B LW
1 #5 X 20'-6" @12" alt.
1 #5 X 21'-3" @12" B LW
1 #5 X 29'-0" @12" alt.
1 #5 X 24'-0" @12" B LW
1 #5 X 28'-0" @12" alt.
1 #5 X 22'-9" @12" B LW_(b)

LIST-2
1 #5 X 10'-0" @12" B SW_(a)
1 #5 X 13'-6" @12" alt.
1 #5 X 12'-6" @12" B SW
1 #5 X 21'-3" @12" alt.
1 #5 X 15'-0" @12" B SW
1 #5 X 20'-0" @12" alt.
1 #5 X 15'-0" @12" B SW_(b)

LIST-3
1 #5 X 8'-0" @12" B SW_(a)
1 #5 X 15'-0" @12" alt.
1 #5 X 13'-6" @12" B SW
1 #5 X 22'-0" @12" alt.
1 #5 X 21'-0" @12" B SW_(b)

LIST-8
1 #5 X 24'-0" @12" B SW_(a)
1 #5 X 24'-3" @12" B SW
1 #5 X 24'-6" @12" B SW
1 #5 X 24'-9" @12" B SW
1 #5 X 25'-0" @12" B SW
1 #5 X 25'-3" @12" B SW
1 #5 X 25'-6" @12" B SW
1 #5 X 25'-9" @12" B SW
1 #5 X 25'-11" @12" B SW
1 #5 X 26'-1" @12" B SW
1 #5 X 26'-3" @12" B SW
1 #5 X 26'-5" @12" B SW
1 #5 X 26'-7" @12" B SW
2 #5 X 26'-9" @12" B SW
2 #5 X 26'-11" @12" B SW
2 #5 X 27'-2" @12" B SW
2 #5 X 27'-3" @12" B SW
5 #5 X 27'-4" @12" B SW
2 #5 X 27'-3" @12" B SW
2 #5 X 27'-1" @12" B SW
2 #5 X 26'-11" @12" B SW
1 #5 X 26'-10" @12" B SW
1 #5 X 26'-8" @12" B SW
1 #5 X 26'-7" @12" B SW
1 #5 X 26'-5" @12" B SW
1 #5 X 26'-3" @12" B SW
1 #5 X 26'-1" @12" B SW
1 #5 X 25'-11" @12" B SW
1 #5 X 12'-7" @12" B SW_(b)

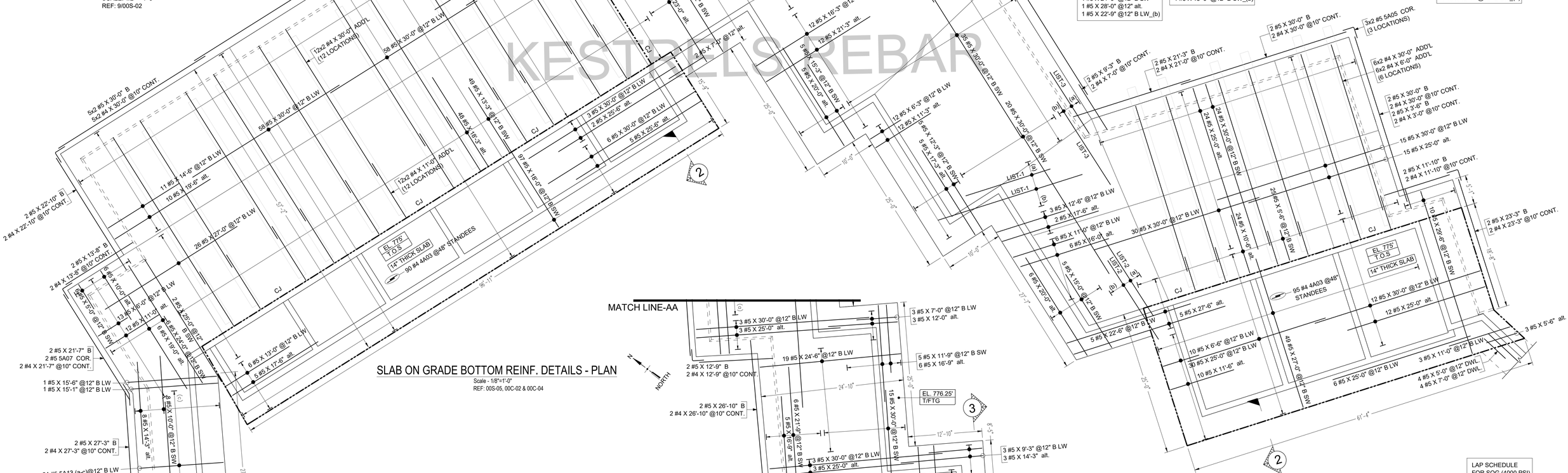

SLAB ON GRADE BOTTOM REINF. DETAILS - PLAN
Scale - 1/8"=1'-0"
REF: 00S-05, 00C-02 & 00C-04

KESTRELS REBAR

Drawing Sheet : R-01																			BAR LIST
Bar Mark	Qty	Size	Total Length	Type	'A'	'B'	'C'	'D'	'E'	'F'	'G'	'H'	'J'	'K'	'O'	'R'
4A02	420	#4	5'-0 $\frac{1}{8}$"	3		1'-3"	1'-4"	2'-1 $\frac{1}{8}$"				0'-11 $\frac{1}{8}$"		0'-11"	4'-7 $\frac{1}{8}$"	
4A03	1135	#4	4'-11"	25		1'-6"	0'-6 $\frac{1}{8}$"	0'-10"	0'-6 $\frac{1}{8}$"	1'-6"		0'-6 $\frac{1}{8}$"		0'-3 $\frac{1}{8}$"		
5A05	16	#5	4'-0"	17		2'-0"	2'-0"									
5A07	2	#5	3'-11 $\frac{1}{8}$"	3		2'-0"	1'-11 $\frac{1}{8}$"					0'-11 $\frac{1}{8}$"		1'-8 $\frac{1}{8}$"	3'-8 $\frac{1}{8}$"	
5A08a	9	#5	22'-6"			22'-6"										
Varies To																
5A08	7	#5	23'-0"			23'-0"										
5A09	7	#5	5'-4 $\frac{1}{8}$"	3		2'-0"	1'-6 $\frac{1}{8}$"	2'-0"				1'-1 $\frac{1}{8}$"		1'-0 $\frac{1}{8}$"	5'-0 $\frac{1}{8}$"	
5A12a	9	#5	24'-10"			24'-10"										
Varies To																
5A12c	7	#5	25'-0"			25'-0"										
5A13a	9	#5	14'-7"			14'-7"										
Varies To																
5A13c	6	#5	14'-9"			14'-9"										

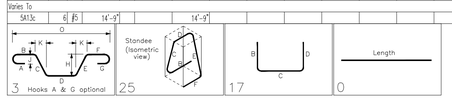

LAP SCHEDULE FOR SOG (4000 PSI)	
SIZE	LENGTH
#3	14"
#4	19"
#5	24"
#6	29"
#7	46"
#8	60"
#9	76"
#10	97"
#11	120"

ABBREVIATIONS	
CORNER BAR	COR.
VERTICAL	V
DOWEL	DWL.
TOP&BOTTOM	T&B
CONTINUOUS	CONT.
ALTERNATE	alt.
SHORT WAY	SW
LONG WAY	LW
TOP OF SLAB	T.O.S

NOTES:-

1. TYPICAL CLEARANCES
SLAB
A) TOP - 3"
B) SIDE - 3"
C) BOTTOM - 3"
2. A/E/C PLEASE VERIFY THE ALL CLOUDED ITEMS
3. PROVIDE FIELD CUT AS REQUIRED LOCATIONS
4. BARS TO BE PLACED AT EQUAL SPACING U.O.N.
5. TILT HOOK TO ACCOMODATE THE COVER, IF NEED

ALL BARS ARE ASTM A615 GRADE 60 BLACK

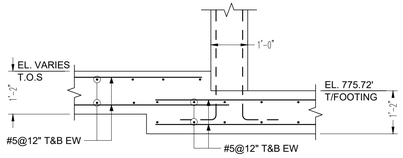

SECTION 4
SCALE: 1/2" = 1'-0"

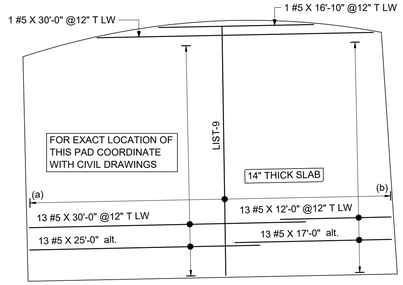

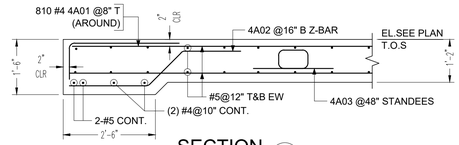

SECTION 1
SCALE: 1/2" = 1'-0"
REF: 00S-05A

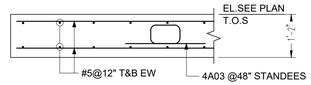

SECTION 2
SCALE: 1/2" = 1'-0"
REF: 00S-05A

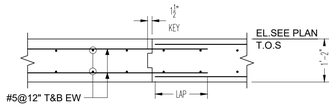

KEYED CONSTRUCTION JOINT (KCJ)
SCALE: 1/2" = 1'-0"
REF: 9/00S-02

LIST-9
1 #5 X 24'-0" @12" T SW_(a)
1 #5 X 24'-3" @12" T SW
1 #5 X 24'-6" @12" T SW
1 #5 X 24'-9" @12" T SW
1 #5 X 25'-0" @12" T SW
1 #5 X 25'-3" @12" T SW
1 #5 X 25'-6" @12" T SW
1 #5 X 25'-9" @12" T SW
1 #5 X 25'-11" @12" T SW
1 #5 X 26'-1" @12" T SW
1 #5 X 26'-3" @12" T SW
1 #5 X 26'-5" @12" T SW
1 #5 X 26'-7" @12" T SW
2 #5 X 26'-9" @12" T SW
2 #5 X 26'-11" @12" T SW
2 #5 X 27'-2" @12" T SW
2 #5 X 27'-3" @12" T SW
5 #5 X 27'-4" @12" T SW
2 #5 X 27'-3" @12" T SW
2 #5 X 27'-1" @12" T SW
2 #5 X 26'-11" @12" T SW
1 #5 X 26'-10" @12" T SW
1 #5 X 26'-8" @12" T SW
1 #5 X 26'-7" @12" T SW
1 #5 X 26'-5" @12" T SW
1 #5 X 26'-3" @12" T SW
1 #5 X 26'-1" @12" T SW
1 #5 X 25'-11" @12" T SW
1 #5 X 12'-7" @12" T SW_(b)

LIST-4
1 #5 X 23'-0" @12" T SW_(a)
1 #5 X 19'-6" @12" alt.
1 #5 X 28'-3" @12" T SW
1 #5 X 27'-3" @12" alt_(b)

LIST-5
1 #5 X 12'-0" @12" T SW_(a)
1 #5 X 10'-9" @12" alt.
1 #5 X 19'-6" @12" T SW
1 #5 X 18'-6" @12" alt.
1 #5 X 27'-6" @12" T SW
1 #5 X 26'-3" @12" alt.
1 #5 X 30'-0" @12" T SW
1 #5 X 24'-9" @12" alt.
1 #5 X 29'-3" @12" T SW_(b)

LIST-6
1 #5 X 9'-6" @12" T LW_(a)
1 #5 X 6'-5" @12" alt.
1 #5 X 17'-3" @12" T LW
1 #5 X 14'-9" @12" alt.
1 #5 X 19'-6" @12" T LW
1 #5 X 14'-3" @12" alt.
1 #5 X 19'-0" @12" T LW_(b)

LIST-7
1 #5 X 23'-3" @12" T SW_(a)
1 #5 X 23'-6" @12" T SW
1 #5 X 23'-9" @12" T SW
1 #5 X 24'-0" @12" T SW
1 #5 X 24'-3" @12" T SW
1 #5 X 24'-6" @12" T SW
1 #5 X 24'-9" @12" T SW
1 #5 X 25'-0" @12" T SW
1 #5 X 25'-3" @12" T SW
1 #5 X 25'-6" @12" T SW
1 #5 X 25'-9" @12" T SW
1 #5 X 26'-0" @12" T SW_(b)

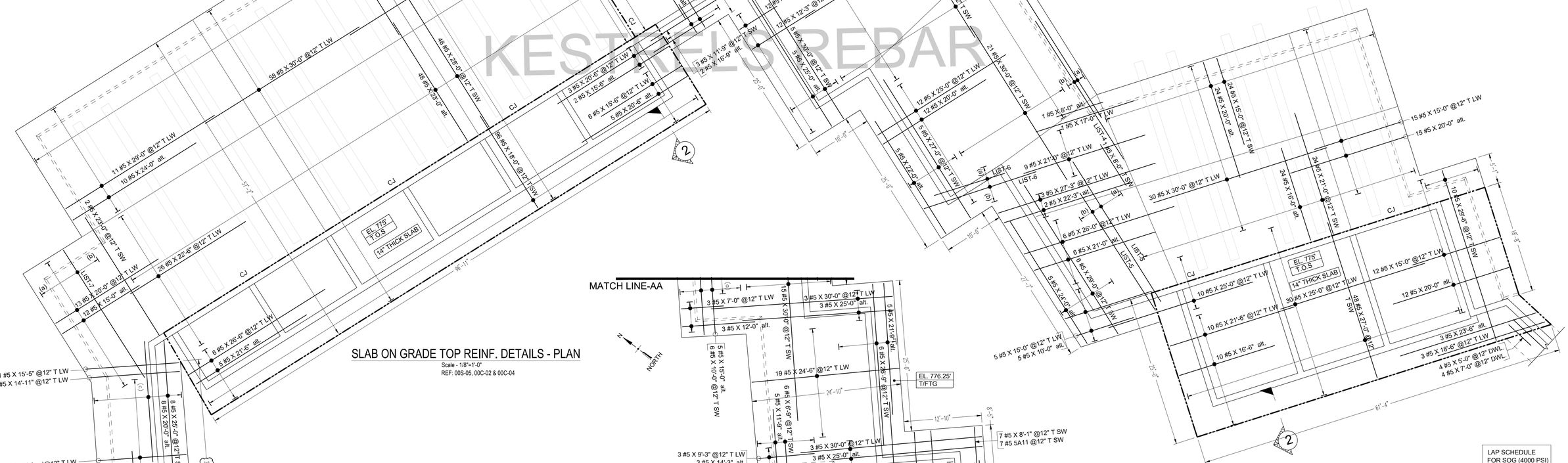

SLAB ON GRADE TOP REINF. DETAILS - PLAN
Scale - 1/8"=1'-0"
REF: 00S-05, 00C-02 & 00C-04

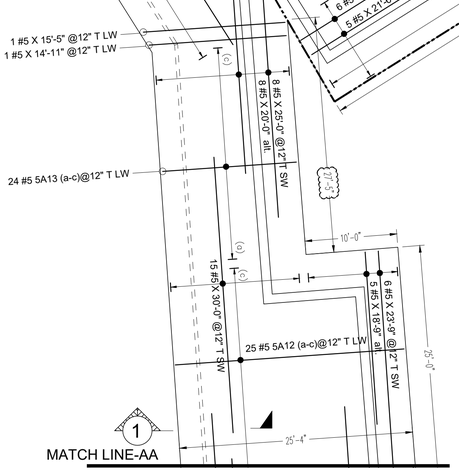

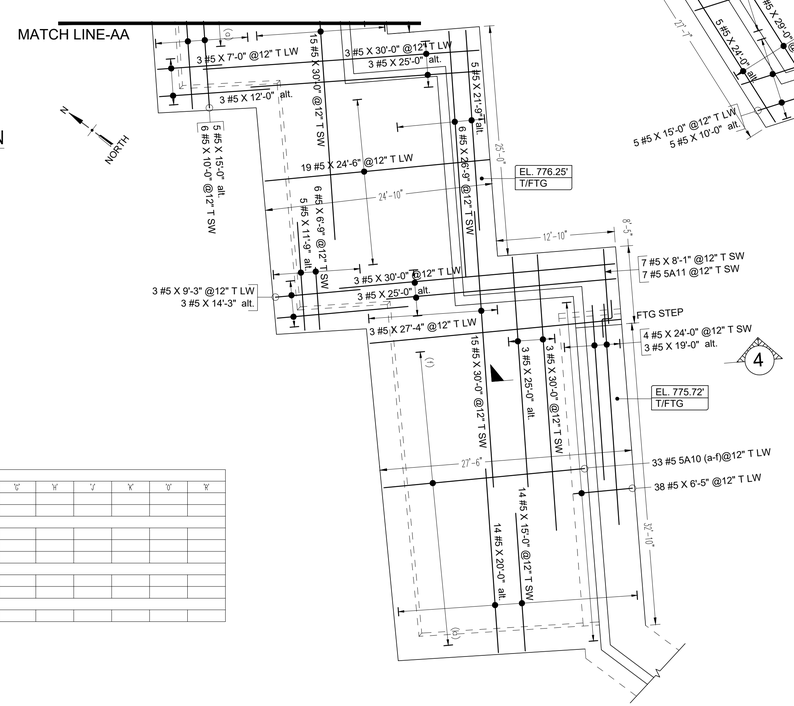

LAP SCHEDULE FOR SOG (4000 PSI)	
SIZE	LENGTH
#3	14"
#4	19"
#5	24"
#6	29"
#7	46"
#8	60"
#9	76"
#10	97"
#11	120"

BAR LIST

Bar Mark	Qty	Size	Total Length	Type	'A'	'B'	'C'	'D'	'E'	'F'	'G'	'H'	'J'	'K'	'O'	'R'
Drawing Sheet : R-01A																
4A01	810	#4	4'-0"	17		1'-0"	3'-0"									
5A10a	6	#5	21'-8"			21'-8"										
Varies To																
5A10f	3	#5	22'-1"			22'-1"										
5A11	7	#5	5'-2"	20		2'-0"	1'-2"	2'-0"								
5A12a	9	#5	24'-10"			24'-10"										
Varies To																
5A12c	7	#5	25'-0"			25'-0"										
5A13a	9	#5	14'-3"			14'-3"										
Varies To																
5A13c	6	#5	14'-9"			14'-9"										

ABBREVIATIONS	
CORNER BAR	COR.
VERTICAL	V
DOWEL	DWL.
TOP&BOTTOM	T&B
CONTINUOUS	CONT.
ALTERNATE	alt.
SHORT WAY	SW
LONG WAY	LW
TOP OF SLAB	T.O.S

NOTES:-

1. TYPICAL CLEARANCES
SLAB
A) TOP - 3"
B) SIDE - 3"
C) BOTTOM - 3"
2. A/E/C PLEASE VERIFY THE ALL CLOUDED ITEMS
3. PROVIDE FIELD CUT AS REQUIRED LOCATIONS
4. BARS TO BE PLACED AT EQUAL SPACING U.O.N.
5. TILT HOOK TO ACCOMODATE THE COVER, IF NEED

ALL BARS ARE ASTM A615 GRADE 60 BLACK

KESTRELS REBAR

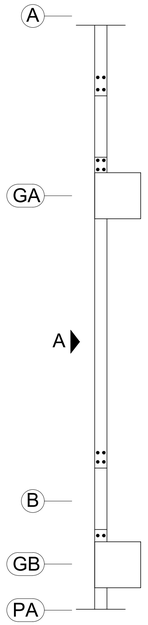

AREA E - GROCER LOADING AREA
MASONRY REINF. DETAILS - PLAN
Scale - 1/4"=1'-0"
REF: S2.01e, A2.01e, S4.20

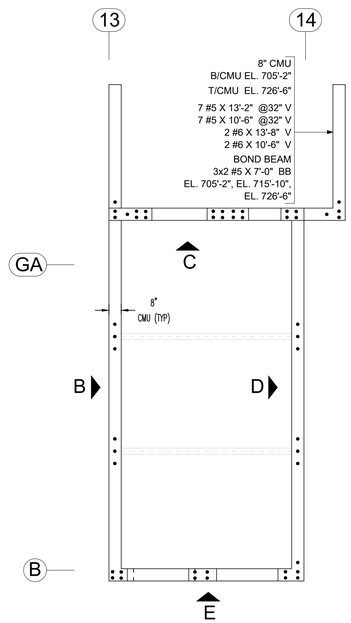

AREA E - STAIR D
MASONRY REINF. DETAILS - PLAN
Scale - 1/4"=1'-0"
REF: S2.01e, A2.01e, S4.20 & A7.05

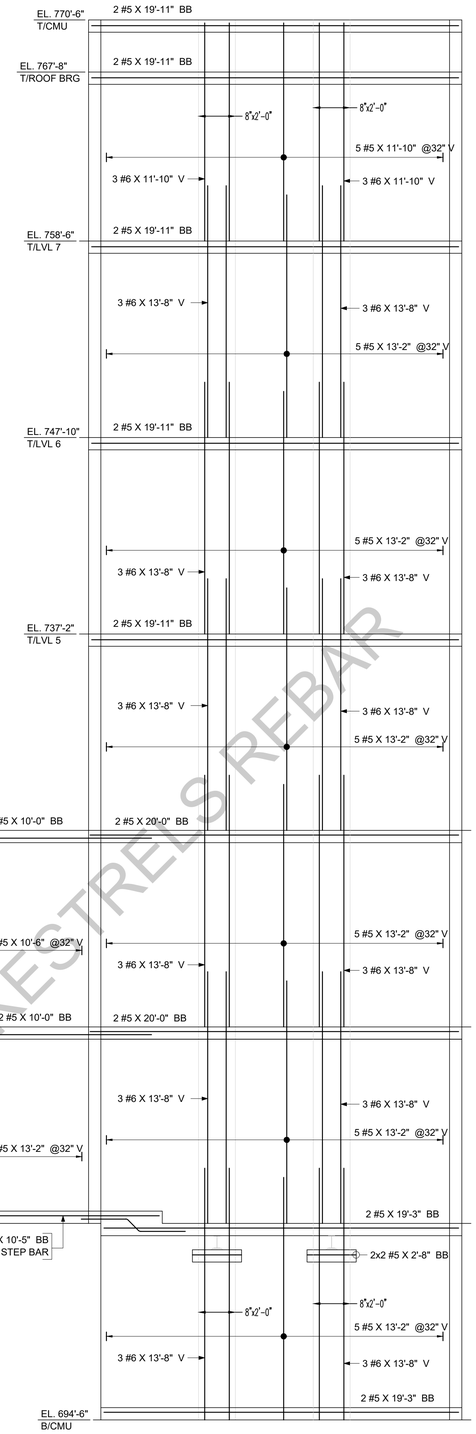

ELEVATION (B)
SCALE: 1/4" = 1'-0"
REF: S2.01e, A2.01e, S4.20 & A7.05

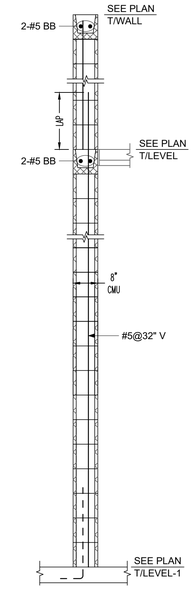

TYP. SECTION
Scale - 1/2"=1'-0"

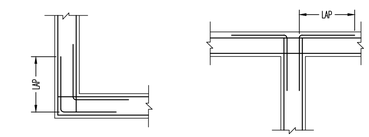

TYPICAL BOND BEAM CORNER DETAILS
SCALE: 1/2" = 1'-0"
REF: S4.20

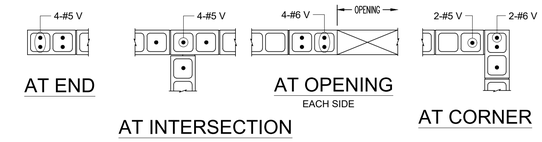

MASONRY REINFORCEMENT ARRANGEMENT
SCALE: 1/2"=1'-0"

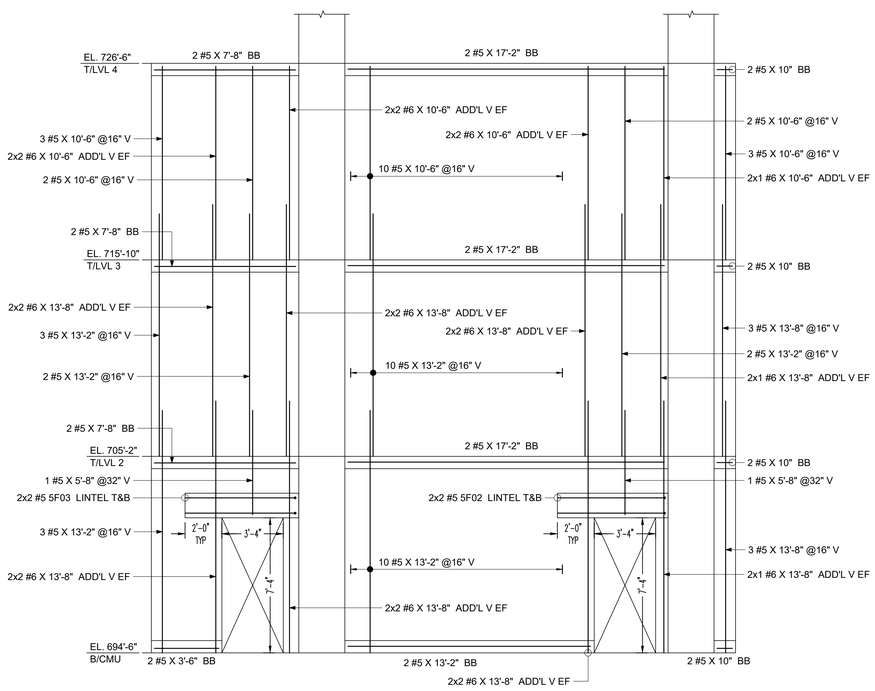

ELEVATION (A)
SCALE: 1/4" = 1'-0"
REF: S2.01e, A2.01e, S4.20 & A7.05

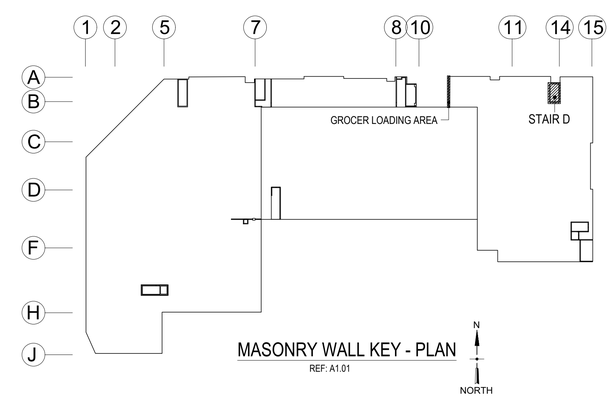

MASONRY WALL KEY - PLAN
REF: A1.01

LAP SCHEDULE FOR MASONRY	
48 DIA BAR	
SIZE	LENGTH
#3	1'-6"
#4	2'-0"
#5	2'-6"
#6	3'-0"
#7	3'-6"
#8	4'-0"
#9	4'-7"
#10	5'-1"
#11	5'-8"

ABBREVIATIONS	
CORNER BAR	COR.
ADDITIONAL	ADD'L
EACH SIDE	ES
CONTINUOUS	CONT.
VERTICAL	V
BOND BEAM	BB
TOP OF SLAB	T.O.S

NOTES:-
1. TYPICAL CLEARANCES
CMU
A) TOP - 2"
B) END - 2"
2. PROVIDE FIELD CUT AS REQUIRED LOCATIONS
3. BARS TO BE PLACED AT EQUAL SPACING U.O.N.
4. TILT HOOK TO ACCOMODATE THE COVER, IF NEED

ALL BARS ARE ASTM A615 GRADE 60 BLACK

KESTRELS REBAR

Drawing Sheet : R-05																	BAR LIST
Bar Mark	Qty	Size	Total Length	Type	"A"	"B"	"C"	"D"	"E"	"F"	"G"	"H"	"J"	"K"	"O"	"R"	
5F01	2	#5	5'-11 ½"	3		2'-6"	0'-11 ½"	2'-6"				0'-8 ½"		0'-7 ¾"	5'-7 ¾"		
5F02	4	#5	6'-8"	2	0'-10"	5'-10"											
5F03	4	#5	6'-10"	2	0'-10"	6'-0"											
5F04	78	#5	5'-0"	17		2'-6"	2'-6"										
5F05	2	#5	4'-4"	17		1'-10"	2'-6"										
5F06	4	#5	7'-0"	2	0'-10"	6'-2"											
5F07	12	#5	7'-4"	2	0'-10"	6'-6"											
5F08	4	#5	7'-5"	2	0'-10"	6'-7"											

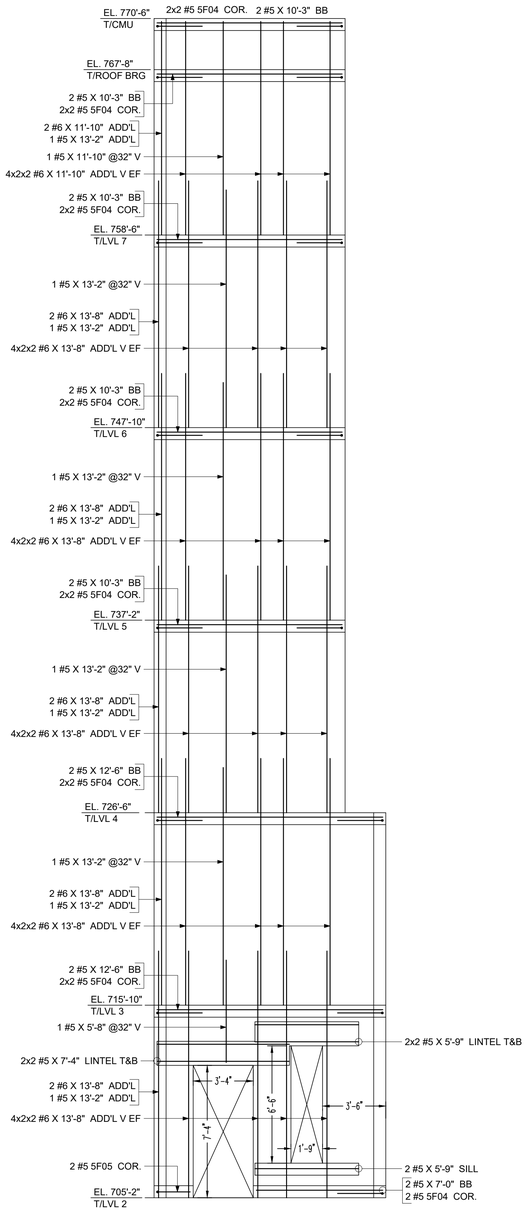

ELEVATION C

SCALE: 1/4" = 1'-0"
REF: S2.01e, A2.01e, S4.20 & A7.05

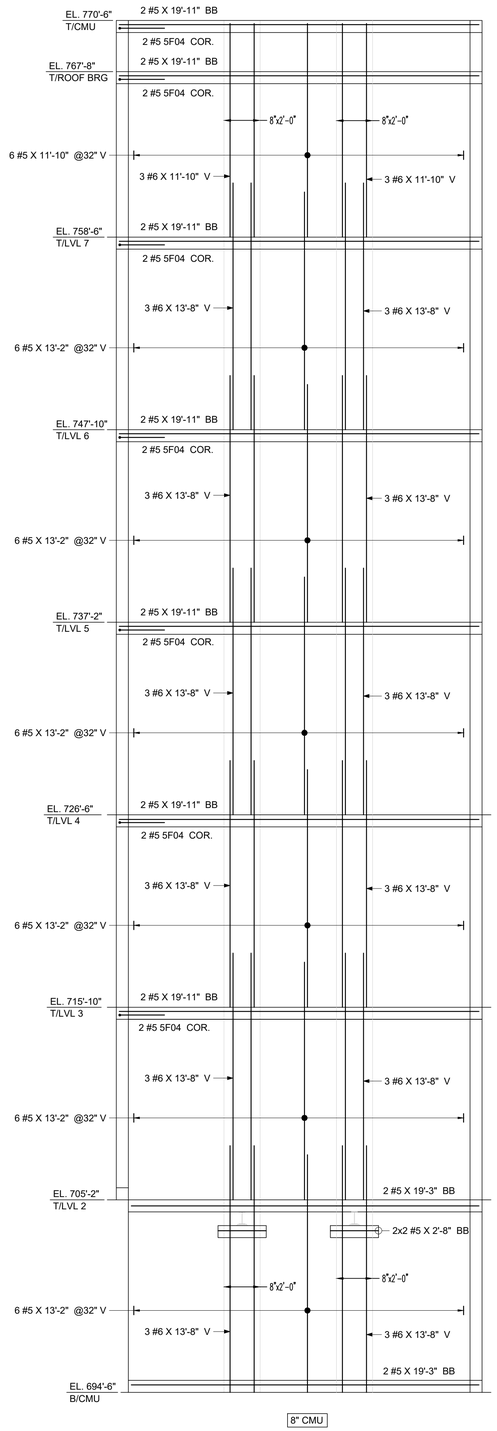

ELEVATION D

SCALE: 1/4" = 1'-0"
REF: S2.01e, A2.01e, S4.20 & A7.05

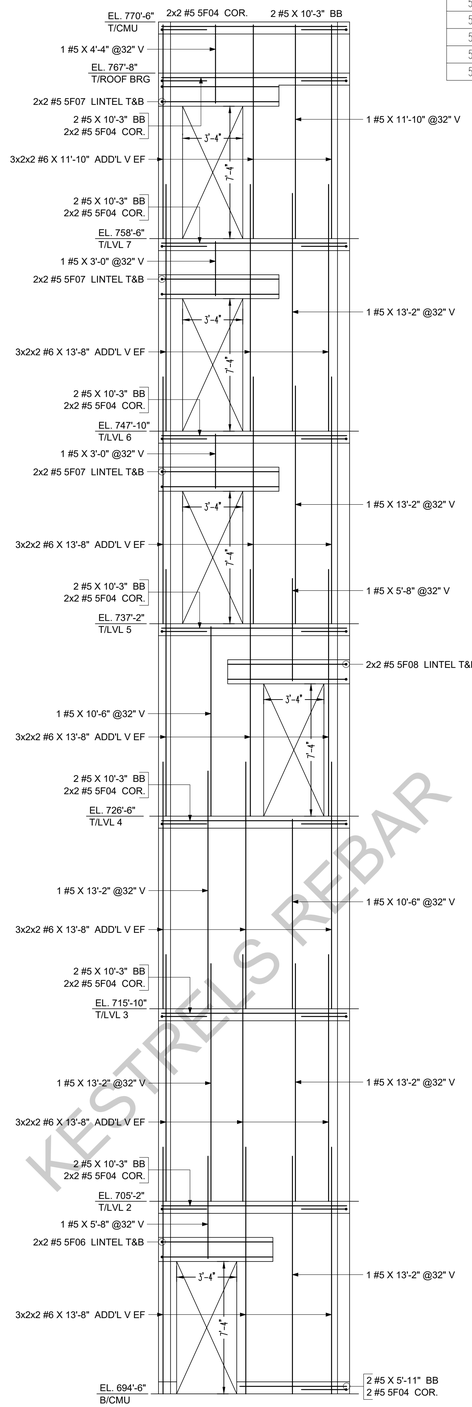

ELEVATION E

SCALE: 1/4" = 1'-0"
REF: S2.01e, A2.01e, S4.20 & A7.05

KESTRELS REBAR

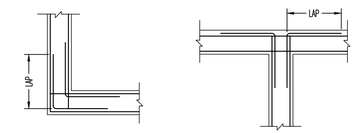

TYPICAL BOND BEAM CORNER DETAILS

SCALE: 1/2" = 1'-0"
REF: S4.20

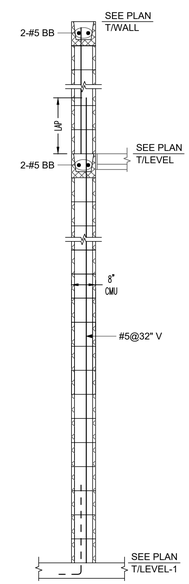

TYP. SECTION

Scale - 1/2"=1'-0"

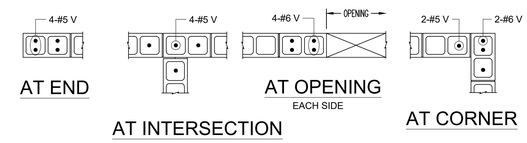

AT END

AT INTERSECTION

AT OPENING
EACH SIDE

AT CORNER

MASONRY REINFORCEMENT ARRANGEMENT

SCALE: 1/2"=1'-0"

LAP SCHEDULE FOR MASONRY	
48 DIA BAR	
SIZE	LENGTH
#3	1'-6"
#4	2'-0"
#5	2'-6"
#6	3'-0"
#7	3'-6"
#8	4'-0"
#9	4'-7"
#10	5'-1"
#11	5'-8"

ABBREVIATIONS	
CORNER BAR	COR.
ADDITIONAL	ADD'L
EACH SIDE	ES
CONTINUOUS	CONT.
VERTICAL	V
BOND BEAM	BB
TOP OF SLAB	T.O.S

NOTES:-

1. TYPICAL CLEARANCES
CMU
   A) TOP - 2"
   B) END - 2"
2. PROVIDE FIELD CUT AS REQUIRED LOCATIONS
3. BARS TO BE PLACED AT EQUAL SPACING U.O.N.
4. TILT HOOK TO ACCOMODATE THE COVER, IF NEED

ALL BARS ARE ASTM A615 GRADE 60 BLACK

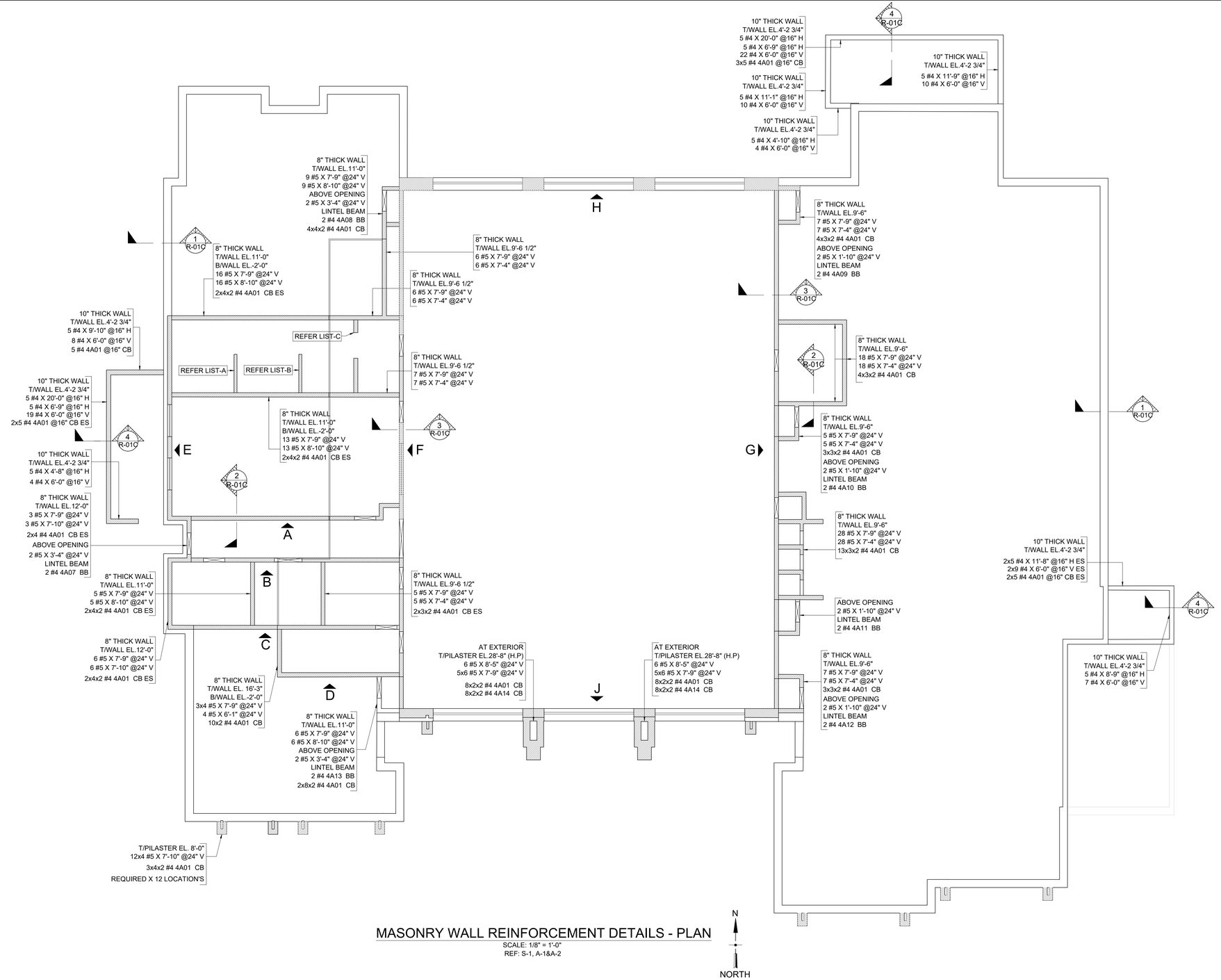

MASONRY WALL REINFORCEMENT DETAILS - PLAN

SCALE: 1/8" = 1'-0"
REF: S-1, A-1&A-2

N
NORTH

LIST-A
6" THICK WALL T/WALL EL.11'-0" B/WALL EL.0'-0" 4 #4 X 7'-0" @48" V 4 #4 X 6'-10" @48" V 4x2 #4 4A01 CB

LIST-B
6" THICK WALL T/WALL EL.11'-0" B/WALL EL.0'-0" 4 #4 X 7'-0" @48" V 4 #4 X 6'-10" @48" V 4x2 #4 4A01 CB

LIST-C
8" THICK WALL T/WALL EL.11'-0" B/WALL EL.-2'-0" 6 #5 X 7'-9" @24" V 6 #5 X 7'-4" @24" V 4x2 #4 4A01 CB 4x2 #4 4A02 CB

LEGEND:

LOCATIONS — 4X2X2=LABEL NOTES BOND BEAM (TYP)
- QUANTITY
- QUANTITY OF STOCK

2X2=LABEL NOTES BOND BEAM (TYP)
- QUANTITY
- QUANTITY OF STOCK

LAP SCHEDULE FOR MASONRY	
AS PER S.3 SHEET	
SIZE	LENGTH
#4	36"
#5	45"
#6	54"
#7	63"

FIELD CUT (TYP.)

NOTES:-

1. TYPICAL CLEARANCES
   A). TOP - 2"
   C). END - 2"
2. A/E/C PLEASE VERIFY THE ALL CLOUDED ITEMS
3. PROVIDE FIELD CUT AS REQUIRED LOCATIONS
4. BARS TO BE PLACED AT EQUAL SPACING U.O.N.
5. TILT HOOK TO ACCOMODATE THE COVER, IF NEED

ALL BARS ARE ASTM A615 GRADE 60 BLACK

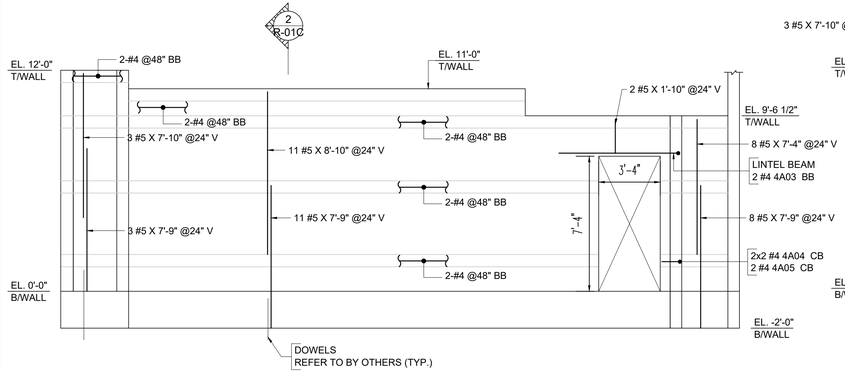

8" CMU

BOND BEAM SCHEDULE:

7x2 #4 X 20'-0" BB
7x2 #4 4A01 CB

ELEVATION A
SCALE: 1/4" = 1'-0"

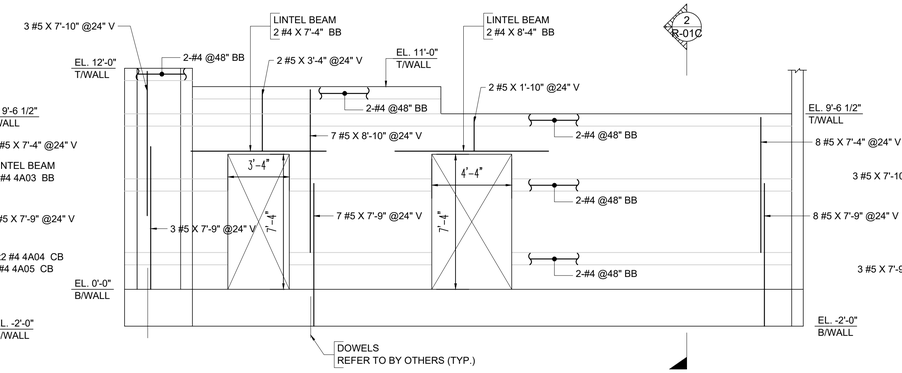

8" CMU

BOND BEAM SCHEDULE:

7x2 #4 X 20'-0" BB
7x2 #4 4A01 CB

ELEVATION B
SCALE: 1/4" = 1'-0"

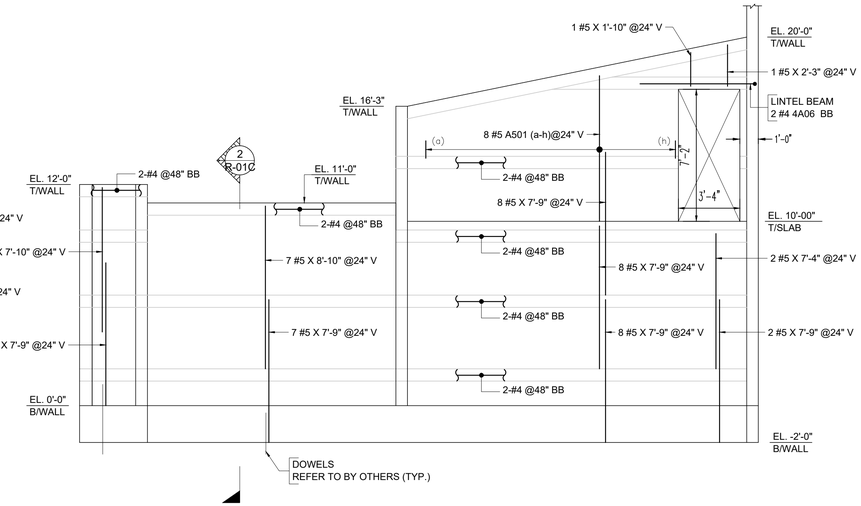

8" CMU

BOND BEAM SCHEDULE:

9x2 #4 X 20'-0" BB
10x2 #4 4A01 CB

ELEVATION C
SCALE: 1/4" = 1'-0"

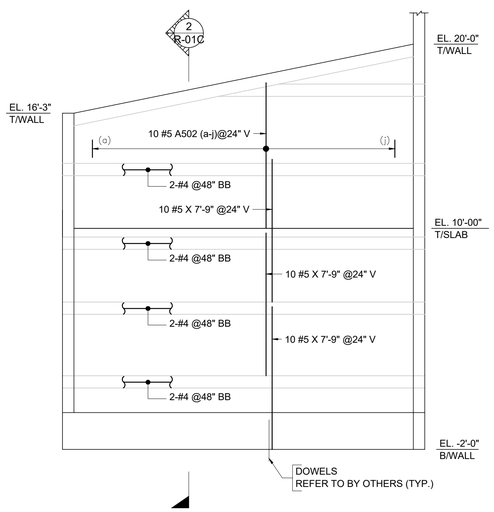

8" CMU

BOND BEAM SCHEDULE:

6x2 #4 X 20'-0" BB
12x2 #4 4A01 CB

ELEVATION D
SCALE: 1/4" = 1'-0"

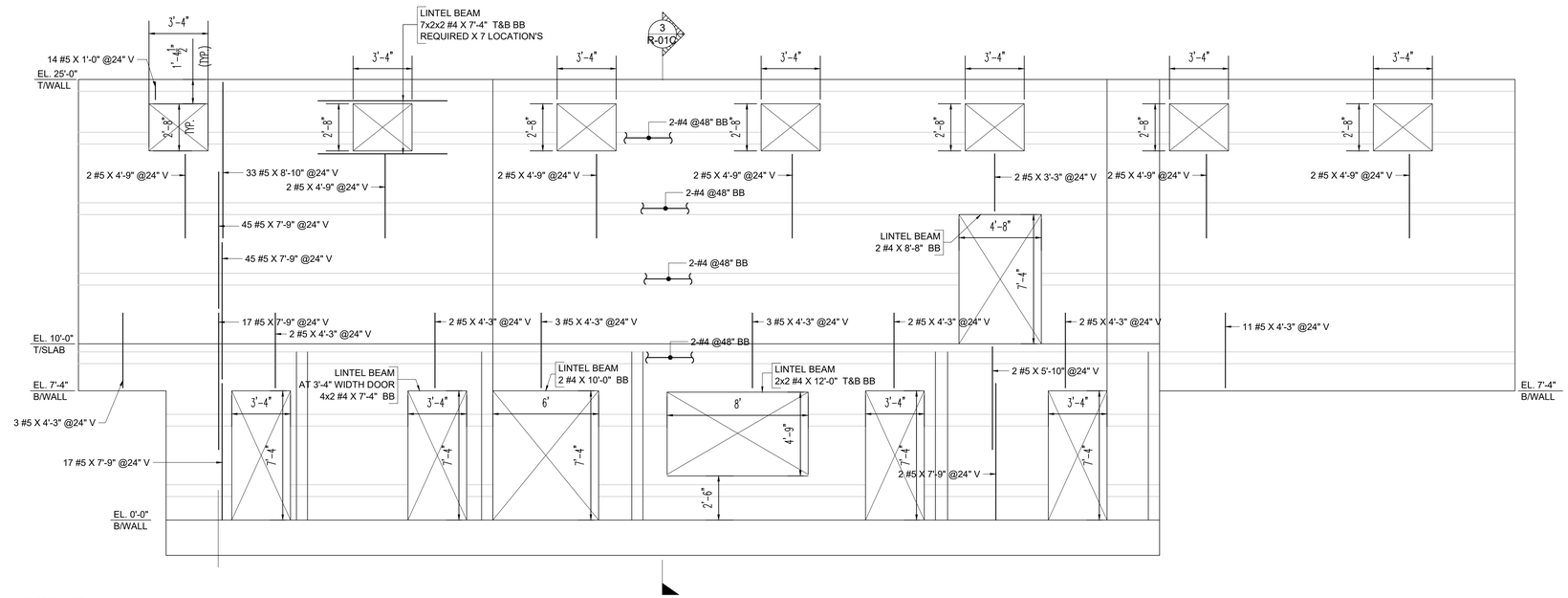

8" CMU

BOND BEAM SCHEDULE:

31x2 #4 X 20'-0" BB
10x2 #4 4A01 CB

ELEVATION F
SCALE: 1/4" = 1'-0"

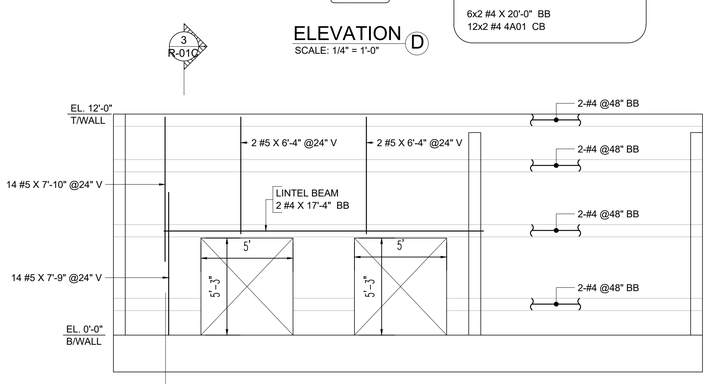

8" CMU

BOND BEAM SCHEDULE:

7x2 #4 X 20'-0" BB
8x2 #4 4A01 CB

ELEVATION E
SCALE: 1/4" = 1'-0"

LEGEND:

LOCATIONS — 4X2X2=LABEL NOTES BOND BEAM (TYP)
- QUANTITY
- QUANTITY OF STOCK

2X2=LABEL NOTES BOND BEAM (TYP)
- QUANTITY
- QUANTITY OF STOCK

LAP SCHEDULE FOR MASONRY	
AS PER S.3 SHEET	
SIZE	LENGTH
#4	36"
#5	45"
#6	54"
#7	63"

FIELD CUT (TYP.)

NOTES:-

1. TYPICAL CLEARANCES
   A). TOP - 2"
   C). END - 2"
2. A/E/C PLEASE VERIFY THE ALL CLOUDED ITEMS
3. PROVIDE FIELD CUT AS REQUIRED LOCATIONS
4. BARS TO BE PLACED AT EQUAL SPACING U.O.N.
5. TILT HOOK TO ACCOMODATE THE COVER, IF NEED

ALL BARS ARE ASTM A615 GRADE 60 BLACK

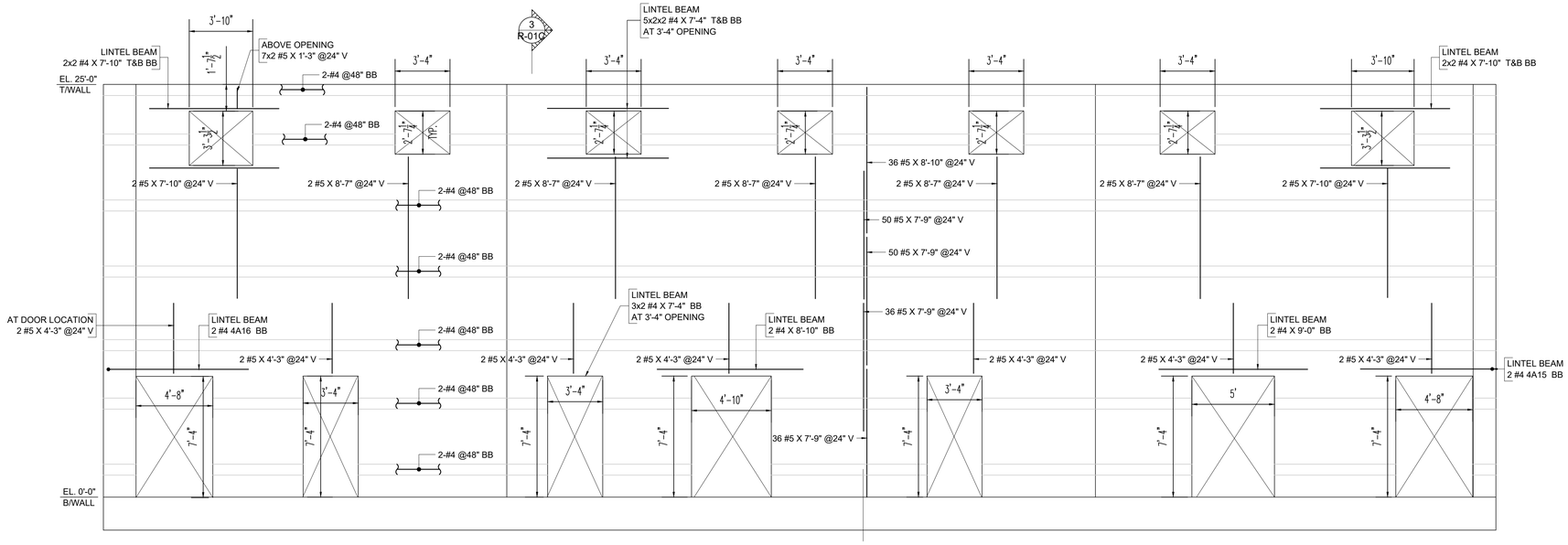

8" CMU

ELEVATION (G)

SCALE: 1/4" = 1'-0"

BOND BEAM SCHEDULE:

29x2 #4 X 20'-0" BB
14x2 #4 4A01 CB

LEGEND:

4X2X2=LABEL NOTES BOND BEAM (TYP)
LOCATIONS
QUANTITY
QUANTITY OF STOCK

2X2=LABEL NOTES BOND BEAM (TYP)
QUANTITY
QUANTITY OF STOCK

LAP SCHEDULE FOR MASONRY	
AS PER S.3 SHEET	
SIZE	LENGTH
#4	36"
#5	45"
#6	54"
#7	63"

FIELD CUT (TYP.)

NOTES:-

1. TYPICAL CLEARANCES
   A). TOP - 2"
   C). END - 2"
2. A/E/C PLEASE VERIFY THE ALL CLOUDED ITEMS
3. PROVIDE FIELD CUT AS REQUIRED LOCATIONS
4. BARS TO BE PLACED AT EQUAL SPACING U.O.N.
5. TILT HOOK TO ACCOMODATE THE COVER, IF NEED

ALL BARS ARE ASTM A615 GRADE 60 BLACK

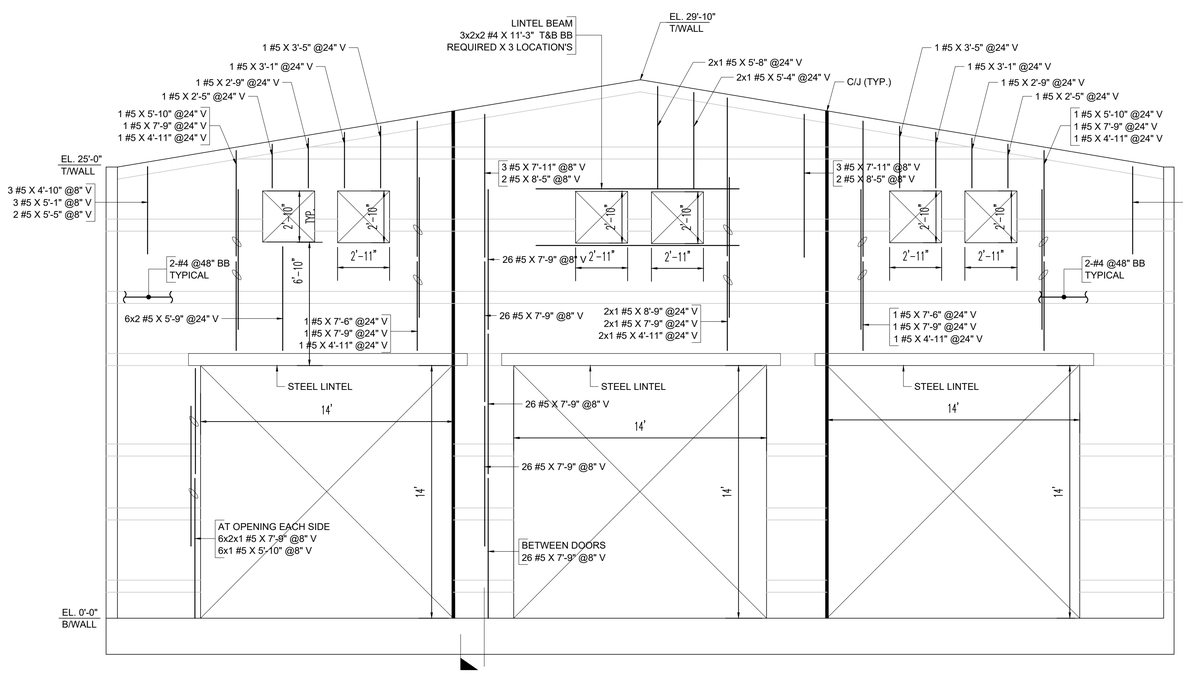

(INTERIOR FACE)

8" CMU

ELEVATION (H)

SCALE: 1/4" = 1'-0"

BOND BEAM SCHEDULE:

19x2 #4 X 20'-0" BB
14x2 #4 4A01 CB

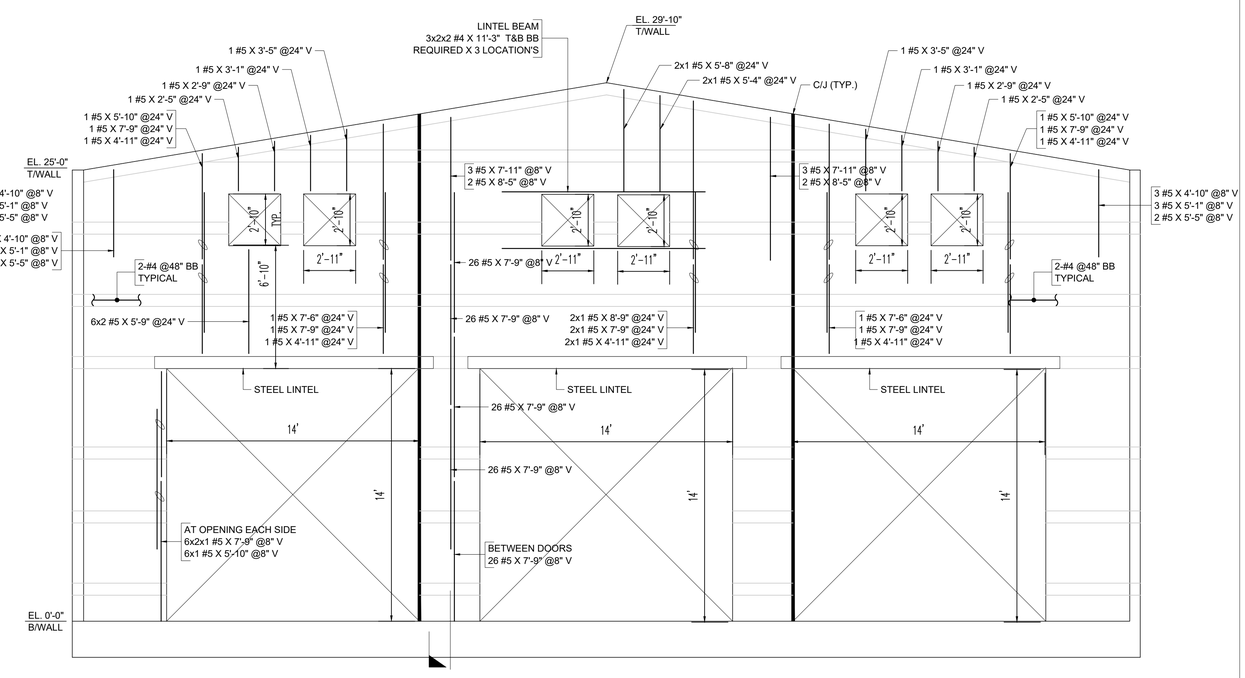

(EXTERIOR FACE)

8" CMU

ELEVATION (H)

SCALE: 1/4" = 1'-0"

BOND BEAM SCHEDULE:

19x2 #4 X 20'-0" BB
14x2 #4 4A01 CB

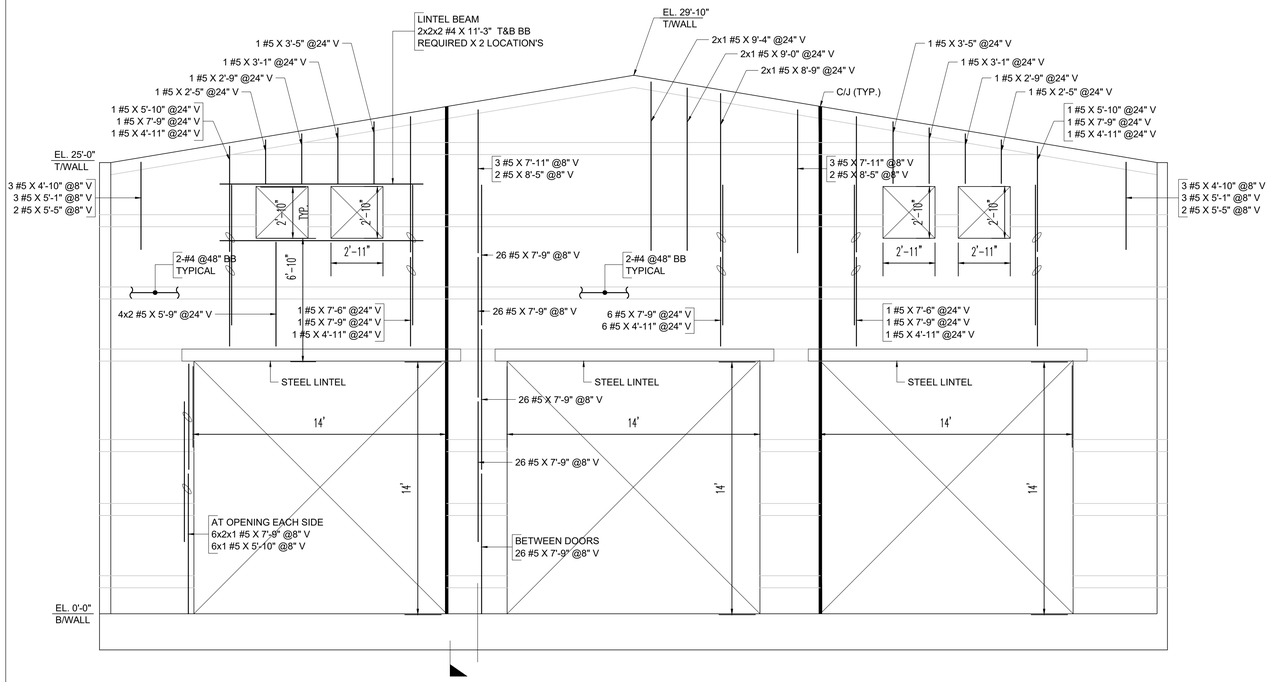

(INTERIOR FACE)

8" CMU

ELEVATION (J)

SCALE: 1/4" = 1'-0"

BOND BEAM SCHEDULE:

19x2 #4 X 20'-0" BB
14x2 #4 4A01 CB

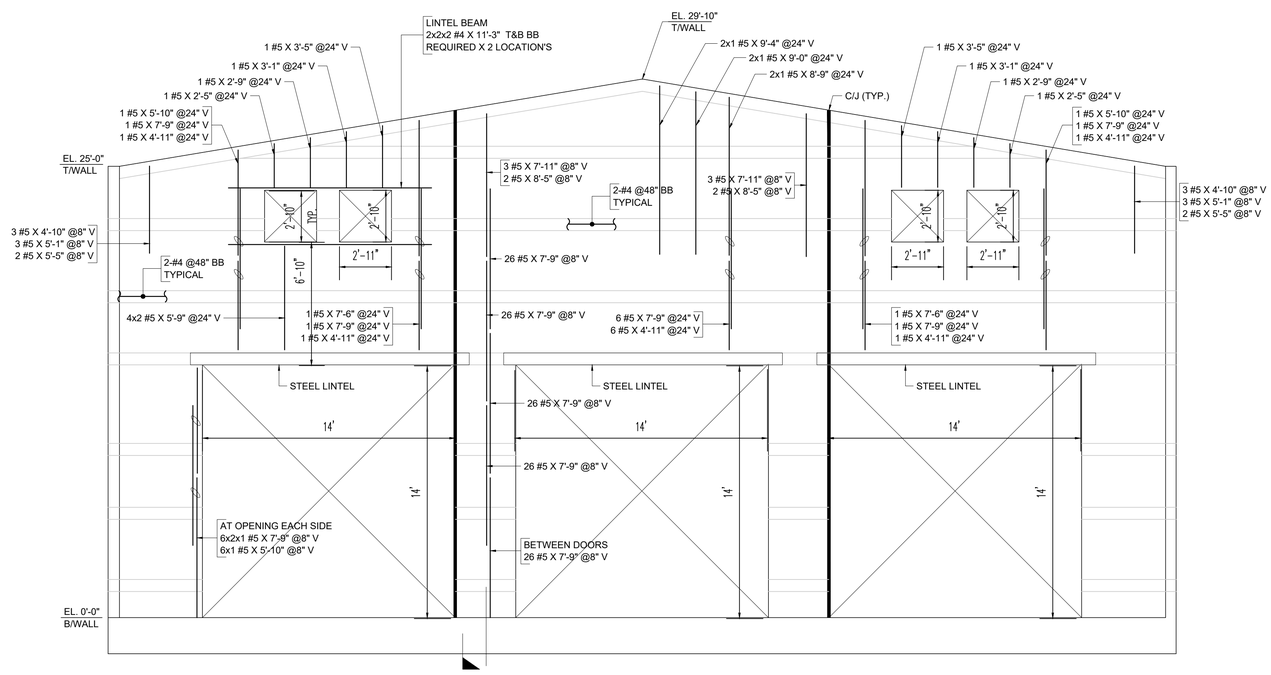

(EXTERIOR FACE)

8" CMU

ELEVATION (J)

SCALE: 1/4" = 1'-0"

BOND BEAM SCHEDULE:

19x2 #4 X 20'-0" BB
14x2 #4 4A01 CB

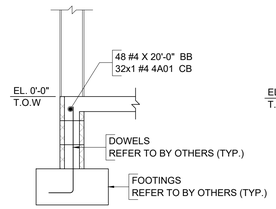

(TYPICAL AT EXTERIOR)

SECTION (1)

SCALE: 1/2" = 1'-0"
REF: 8&8A /S-5

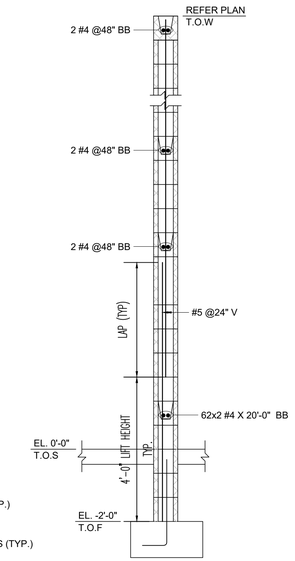

(TYPICAL AT INTERIOR)

SECTION (2)

SCALE: 1/2" = 1'-0"
REF: 8&8A /S-5

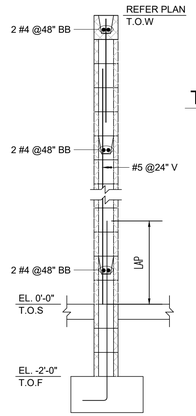

(TYPICAL AT APPARATUS ROOM WALL)

SECTION (3)

SCALE: 1/2" = 1'-0"
REF: 1 /S-7

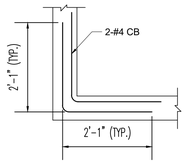

TYPICAL BOND BEAM CORNER DETAILS

SCALE: 1/2" = 1'-0"
REF: 1/S-4

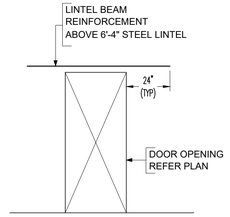

DOOR OPENING TYPICAL DETAIL

SCALE: 1/2"=1'-0"
REF: 1/S-4

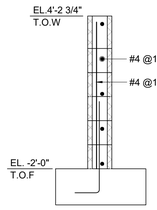

(TYPICAL AT SCREEN WALL)

SECTION (4)

SCALE: 1/2" = 1'-0"
REF: 6 /S-5

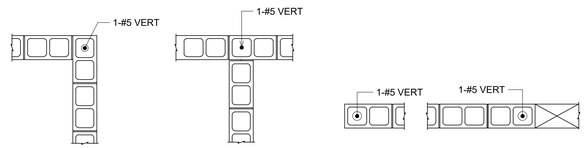

AT CORNER AT INTERSECTION AT END AT OPENING

MASONRY REINFORCEMENT ARRANGEMENT

SCALE: 1/2"=1'-0"
REF: 1/S-4

Drawing Sheet : R-01

BAR LIST

Bar Mark	Qty	Size	Total Length	Type	'A'	'B'	'C'	'D'	'E'	'F'	'G'	'H'	'J'	'K'	'O'	'R'
A501a	1	#5	6'-3"			6'-3"										
Varies To																
A501h	1	#5	9'-0"			9'-0"										
A502a	1	#5	6'-3"			6'-3"										
Varies To																
A502j	1	#5	9'-7"			9'-7"										
4A01	762	#4	4'-2"	17		2'-1"	2'-1"									
4A02	8	#4	4'-4"	17		2'-1"	2'-3"									
4A03	2	#4	7'-2"	2	0'-8"	6'-6"										
4A04	4	#4	5'-4"	20		2'-1"	2'-3"	1'-0"								
4A05	2	#4	6'-5"	20		2'-1"	2'-3"	2'-1"								
4A06	2	#4	6'-11"	2	0'-8"	6'-3"										
4A07	2	#4	7'-1"	2	0'-8"	6'-5"										
4A08	2	#4	6'-4"	2	0'-8"	5'-8"										
4A09	2	#4	8'-2"	2	0'-8"	6'-10"					0'-8"					
4A10	2	#4	7'-1"	2	0'-8"	5'-9"					0'-8"					
4A11	2	#4	7'-3"	2	0'-8"	5'-11"					0'-8"					
4A12	2	#4	7'-8"	2	0'-8"	7'-0"										
4A13	2	#4	8'-0"	2	0'-8"	6'-8"					0'-8"					
4A14	64	#4	7'-9"	17		2'-1"	5'-8"									
4A15	2	#4	8'-8"	2	0'-8"	8'-0"										
4A16	2	#4	9'-2"	2	0'-8"	8'-6"										

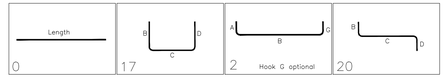

LEGEND:

LOCATIONS
- 4X2X2=LABEL NOTES BOND BEAM (TYP)
  - QUANTITY
  - QUANTITY OF STOCK
- 2X2=LABEL NOTES BOND BEAM (TYP)
  - QUANTITY
  - QUANTITY OF STOCK

A/E/C PLEASE VERIFY ALL CLOUDED DIMENSION(S) AND/OR CLOUDED AREA(S) SHOWN.

LAP SCHEDULE FOR MASONRY	
AS PER S.3 SHEET	
SIZE	LENGTH
#4	36"
#5	45"
#6	54"
#7	63"

FIELD CUT (TYP.)

NOTES:-

1. TYPICAL CLEARANCES
   A). TOP - 2"
   C). END - 2"
2. A/E/C PLEASE VERIFY THE ALL CLOUDED ITEMS
3. PROVIDE FIELD CUT AS REQUIRED LOCATIONS
4. BARS TO BE PLACED AT EQUAL SPACING U.O.N.
5. TILT HOOK TO ACCOMODATE THE COVER, IF NEED

ALL BARS ARE ASTM A615 GRADE 60 BLACK

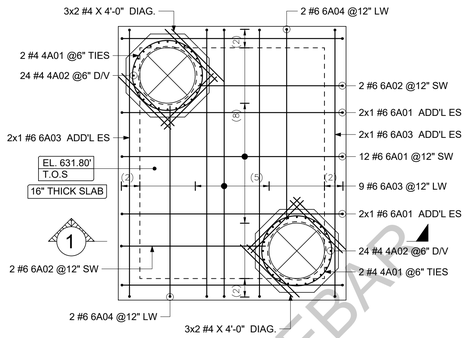

ROOF SLAB TOP BARS

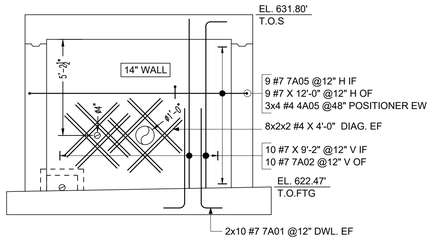

ELEVATION A

SCALE: 1/4" = 1'-0"
REF: S200

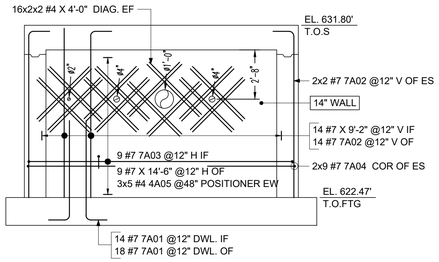

ELEVATION B

SCALE: 1/4" = 1'-0"
REF: S200

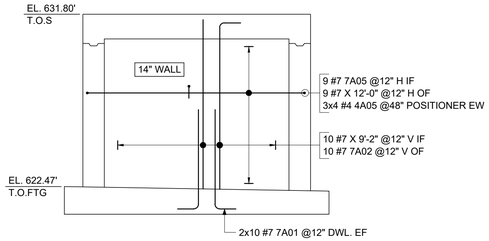

ELEVATION C

SCALE: 1/4" = 1'-0"
REF: S200

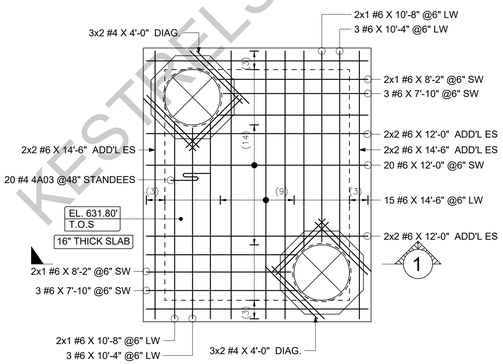

ROOF SLAB BOTTOM BARS

MANHOLE MH-S1-420 REINF. DETAILS

Scale - 1/4"=1'-0"
REF: S200

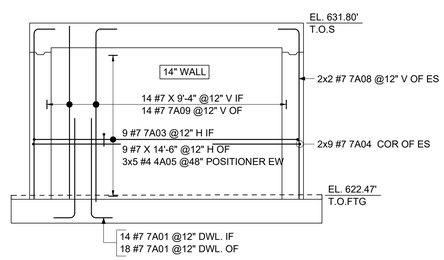

ELEVATION D

SCALE: 1/4" = 1'-0"
REF: S200

Drawing Sheet : R-01																	BAR LIST
Bar Mark	Qty	Size	Total Length	Type	'A'	'B'	'C'	'D'	'E'	'F'	'G'	'H'	'J'	'K'	'O'	'X'	
4A01	4	#4	14'-1 X/8"	T3		12'-0 X/8"					2'-1"				3'-10"		
4A02	48	#4	2'-4 X/8"	2	0'-8"	1'-8 X/8"											
4A03	20	#4	5'-6 X/8"	25		1'-6"	0'-10 X/8"	0'-10"	0'-10 X/8"	1'-6"		0'-10"		0'-5"			
4A04	25	#4	5'-2"	25		1'-6"	0'-8"	0'-10"	0'-8"	1'-6"		0'-8"		0'-4"			
4A05	54	#4	2'-2"	2	0'-8"	0'-10"					0'-8"						
6A01	16	#6	14'-0"	2	1'-0"	12'-0"					1'-0"						
6A02	4	#6	8'-10"	2	1'-0"	7'-10"											
6A03	13	#6	16'-6"	2	1'-0"	14'-6"					1'-0"						
6A04	4	#6	11'-4"	2	1'-0"	10'-4"											
7A01	104	#7	6'-7"	2	1'-2"	5'-5"											
7A02	38	#7	10'-2 X/8"	2	1'-2"	9'-0 X/8"											
7A03	18	#7	16'-8"	2	1'-2"	14'-4"					1'-2"						
7A04	36	#7	9'-6"	17		4'-9"	4'-9"										
7A05	18	#7	14'-2"	2	1'-2"	11'-10"					1'-2"						
7A08	4	#7	10'-6 X/8"	2	1'-2"	9'-2 X/8"											
7A09	14	#7	10'-6 X/8"	2	1'-2"	9'-4 X/8"											
8A01	36	#8	15'-8"	1	0'-11"	13'-10"					0'-11"		0'-8"				
8A02	30	#8	18'-2"	1	0'-11"	16'-4"					0'-11"		0'-8"				

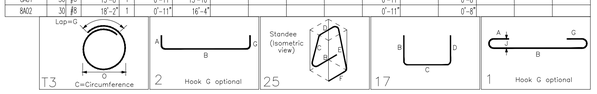

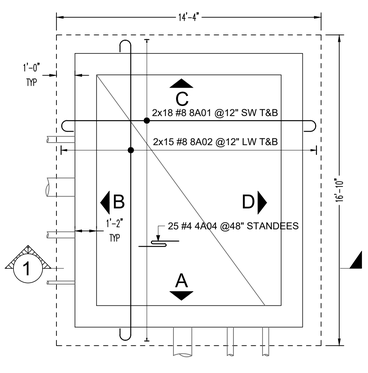

BASE SLAB

MANHOLE MH-S1-420 REINF. DETAILS

Scale - 1/4"=1'-0"
REF: S200

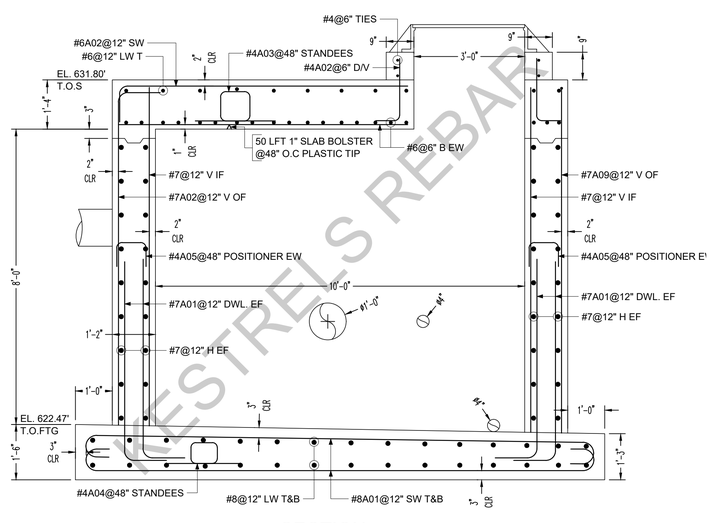

SECTION 1

SCALE: 1/2" = 1'-0"
REF: S200

ABBREVIATIONS	
TOP	T
BOTTOM	B
TOP&BOTTOM	T&B
ADDITIONAL	ADD'L
CORNER BAR	COR.
VERTICAL	V
HORIZONTAL	H
EACH WAY	EW
EACH FACE	EF
INNER FACE	IF
OUTER FACE	OF
EACH SIDE	ES
DOWEL	DWL.
DOWEL/VERTICAL	D/V
LONG WAY BAR	LW
SHORT WAY BAR	SW

NOTES:-

1. TYPICAL CLEARANCES
FOOTING
A) TOP - 2"
B) SIDE - 3"
C) BOTTOM - 3"
WALL
D) SIDE - 2"
E) END - 2"
ROOF SLAB
F) TOP - 2"
C) BOTTOM - 1"
2. TILT HOOK TO ACCOMODATE THE COVER, IF NEED
3. PROVIDE FIELD CUT AS REQUIRED LOCATIONS
4. BARS TO BE PLACED AT EQUAL SPACING U.O.N.
5. A/E/C PLEASE VERIFY THE ALL CLOUDED ITEMS

ALL BARS ARE ASTM A615 GRADE 60 BLACK

KESTRELS REBAR

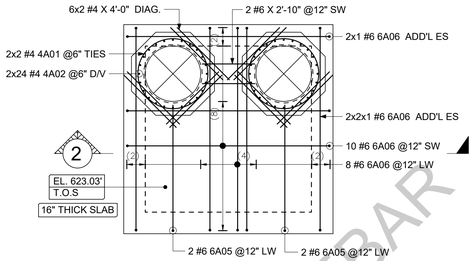

ROOF SLAB TOP BARS

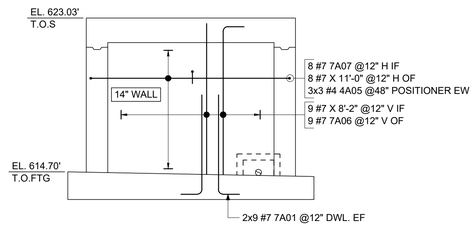

ELEVATION (E)
SCALE: 1/4" = 1'-0"
REF: S200

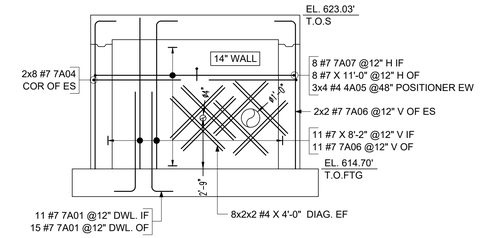

ELEVATION (F)
SCALE: 1/4" = 1'-0"
REF: S200

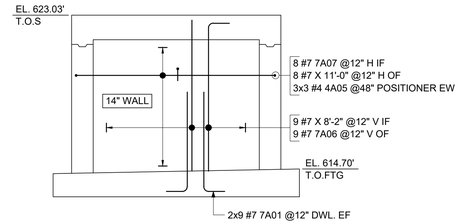

ELEVATION (G)
SCALE: 1/4" = 1'-0"
REF: S200

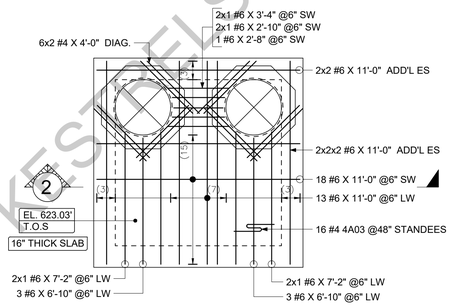

ROOF SLAB BOTTOM BARS

MANHOLE MH-S1-762 REINF. DETAILS

Scale - 1/4"=1'-0"
REF: S200

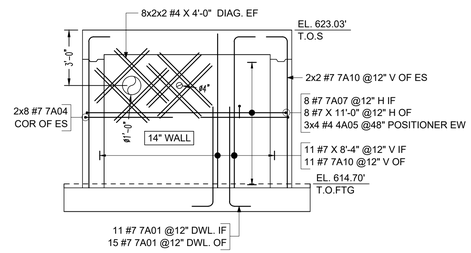

ELEVATION (H)
SCALE: 1/4" = 1'-0"
REF: S200

Drawing Sheet : R-01A					BAR LIST												
Bar Mark	Qty	Size	Total Length	Type	'A'	'B'	'C'	'D'	'E'	'F'	'G'	'H'	'J'	'K'	'O'	'W'
4A01	4	#4	14'-1 X"	13			12'-0 X"					2'-1"			3'-10"	
4A02	48	#4	2'-4 X"	2	0'-8"	1'-8 X"										
4A03	16	#4	5'-6 X"	25		1'-6"	0'-10 X"	0'-10"	0'-10 X"	1'-6"			0'-10"	0'-5"		
4A04	16	#4	5'-2"	25		1'-6"	0'-8"	0'-10"	0'-8"	1'-6"			0'-8"	0'-4"		
4A05	42	#4	2'-2"	2	0'-8"	0'-10"						0'-8"				
6A05	4	#6	7'-10"	2	1'-0"	6'-10"										
6A06	24	#6	13'-0"	2	1'-0"	11'-0"						1'-0"				
7A01	88	#7	6'-7"	2	1'-2"	5'-5"										
7A04	32	#7	9'-6"	17		4'-9"	4'-9"									
7A06	33	#7	9'-2 X"	2	1'-2"	8'-0 X"										
7A07	32	#7	13'-2"	2	1'-2"	10'-10"						1'-2"				
7A10	15	#7	9'-4 X"	2	1'-2"	8'-2 X"										
8A03	56	#8	14'-8"	1	0'-11"	13'-10"						0'-11"		0'-8"		

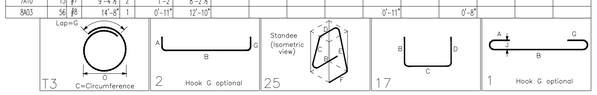

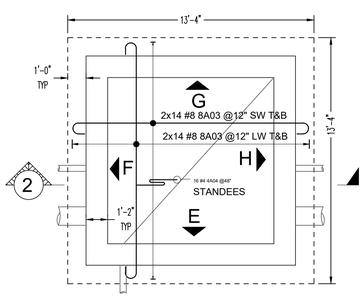

BASE SLAB

MANHOLE MH-S1-762 REINF. DETAILS

Scale - 1/4"=1'-0"
REF: S200

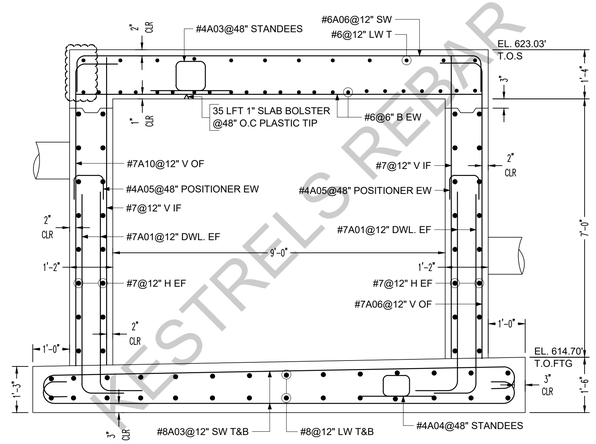

SECTION (2)
SCALE: 1/2" = 1'-0"
REF: S200

ABBREVIATIONS	
TOP	T
BOTTOM	B
TOP&BOTTOM	T&B
ADDITIONAL	ADD'L
CORNER BAR	COR.
VERTICAL	V
HORIZONTAL	H
EACH WAY	EW
EACH FACE	EF
INNER FACE	IF
OUTER FACE	OF
EACH SIDE	ES
DOWEL	DWL.
DOWEL/VERTICAL	D/V
LONG WAY BAR	LW
SHORT WAY BAR	SW

NOTES:-

1. TYPICAL CLEARANCES
FOOTING
A) TOP - 2"
B) SIDE - 3"
C) BOTTOM - 3"
WALL
D) SIDE - 2"
E) END - 2"
ROOF SLAB
F) TOP - 2"
C) BOTTOM - 1"
2. TILT HOOK TO ACCOMODATE THE COVER, IF NEED
3. PROVIDE FIELD CUT AS REQUIRED LOCATIONS
4. BARS TO BE PLACED AT EQUAL SPACING U.O.N.
5. A/E/C PLEASE VERIFY THE ALL CLOUDED ITEMS

ALL BARS ARE ASTM A615 GRADE 60 BLACK

KESTRELS REBAR
KESTRELS REBAR

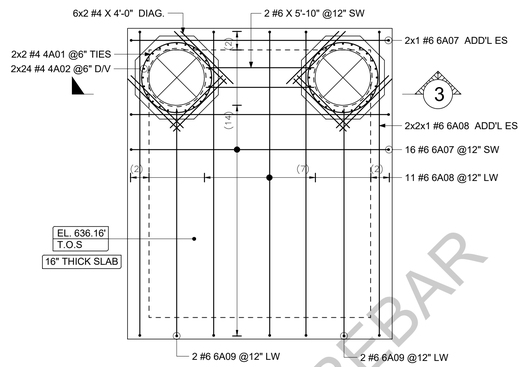

ROOF SLAB TOP BARS

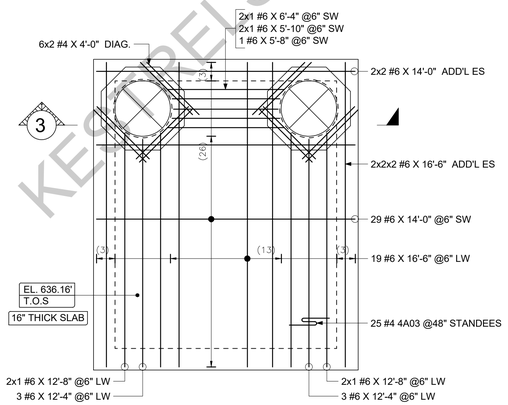

ROOF SLAB BOTTOM BARS

MANHOLE MH-S1-770 REINF. DETAILS

Scale - 1/4"=1'-0"
REF: S201

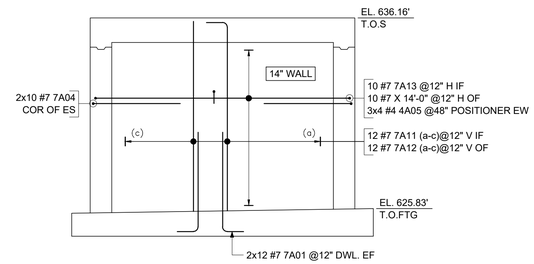

ELEVATION J
SCALE: 1/4" = 1'-0"
REF: S200

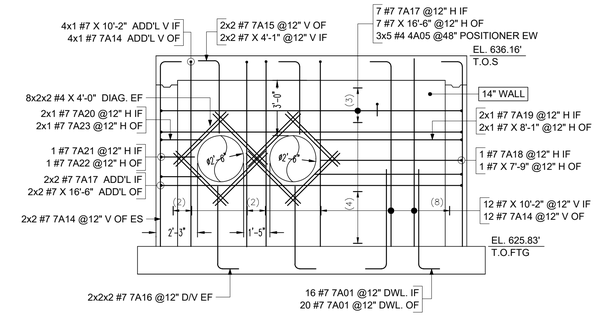

ELEVATION K
SCALE: 1/4" = 1'-0"
REF: S201

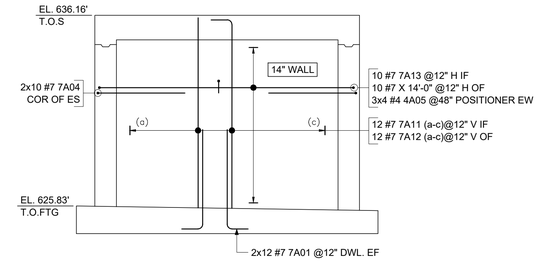

ELEVATION L
SCALE: 1/4" = 1'-0"
REF: S201

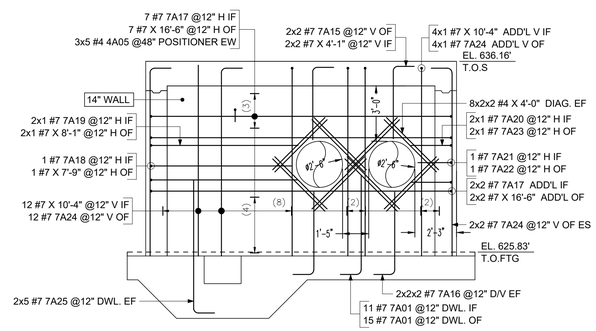

ELEVATION M
SCALE: 1/4" = 1'-0"
REF: S201

Drawing Sheet : R-018					BAR LIST												
Bar Mark	Qty	Size	Total Length	Type	'A'	'B'	'C'	'D'	'E'	'F'	'G'	'H'	'J'	'K'	'O'	'R'
4A01	4	#4	14'-1 X"	13			12'-0 X"				2'-1"				3'-10"	
4A02	48	#4	2'-4 X"	2	0'-8"	1'-8 X"										
4A03	25	#4	5'-6 X"	25		1'-6"	0'-10 X"	0'-10"	0'-10 X"	1'-6"		0'-10"		0'-5"		
4A04	30	#4	5'-3"	25		1'-6"	0'-8"	0'-10"	0'-8"	1'-6"		0'-8"		0'-4"		
4A05	54	#4	2'-2"	2	0'-8"	0'-10"					0'-8"					
6A07	18	#6	16'-0"	2	1'-0"	14'-0"					1'-0"					
6A08	15	#6	16'-6"	2	1'-0"	16'-6"					1'-0"					
6A09	4	#6	13'-4"	2	1'-0"	12'-4"										
7A01	110	#7	6'-1"	2	1'-2"	5'-5"										
7A04	40	#7	9'-6"	17		4'-9"	4'-9"									
7A11a	10	#7	10'-2"			10'-2"										
Varies To																
7A11c	4	#7	10'-3"			10'-3"										
7A12a	8	#7	11'-3"	2	1'-2"	10'-1"										
Varies To																
7A12c	8	#7	11'-4 X"	2	1'-2"	10'-2 X"										
7A13	20	#7	16'-2"	2	1'-2"	13'-10"					1'-2"					
7A14	20	#7	11'-2 X"	2	1'-2"	10'-0 X"										
7A15	8	#7	5'-1 X"	2	1'-2"	3'-11 X"										
7A16	16	#7	5'-8"	2	1'-2"	4'-6"										
7A17	22	#7	18'-8"	2	1'-2"	16'-4"					1'-2"					
7A18	2	#7	8'-10"	2	1'-2"	7'-8"										
7A19	4	#7	9'-2"	2	1'-2"	8'-0"										
7A20	4	#7	3'-4 X"	2	1'-2"	2'-2 X"										
7A21	2	#7	3'-0"	2	1'-2"	1'-10"										
7A22	2	#7	6'-7"	17		1'-10"	4'-9"									
7A23	4	#7	7'-0"	17		2'-3"	4'-9"									
7A24	20	#7	11'-4 X"	2	1'-2"	10'-2 X"										
7A25	10	#7	8'-5"	2	1'-2"	7'-3"										
8A04	36	#8	17'-8"	1	0'-11"	15'-10"					0'-11"		0'-8"			
8A05	30	#8	20'-2"	1	0'-11"	18'-4"					0'-11"		0'-8"			
8A06	4	#8	13'-2"	1	0'-11"	12'-3"							0'-8"			
8A07	4	#8	4'-8"	1	0'-11"	3'-9"							0'-8"			
8A08	4	#8	12'-2"	1	0'-11"	11'-3"							0'-8"			
8A09	4	#8	3'-2"	1	0'-11"	2'-3"							0'-8"			
8A13	6	#8	10'-9 X"	3		1'-4"	3'-8"	5'-9 X"				2'-8"		2'-6 X"	9'-8"	
8A14	7	#8	13'-2"	3		1'-4"	3'-6 X"	4'-8 X"	3'-6 X"			2'-7"		2'-5 X"	10'-11 X"	

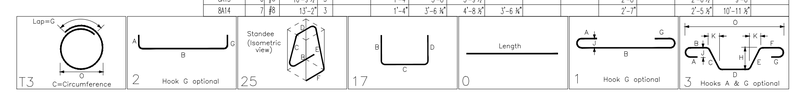

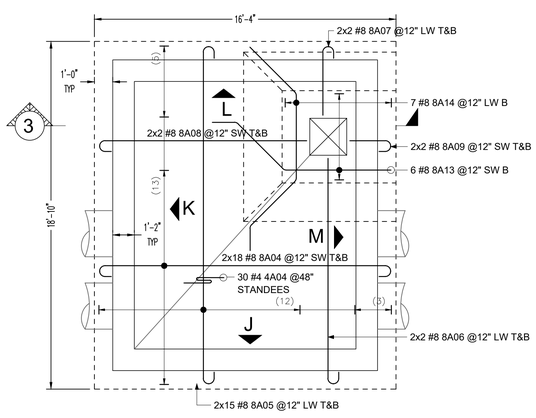

BASE SLAB

MANHOLE MH-S1-770 REINF. DETAILS

Scale - 1/4"=1'-0"
REF: S201

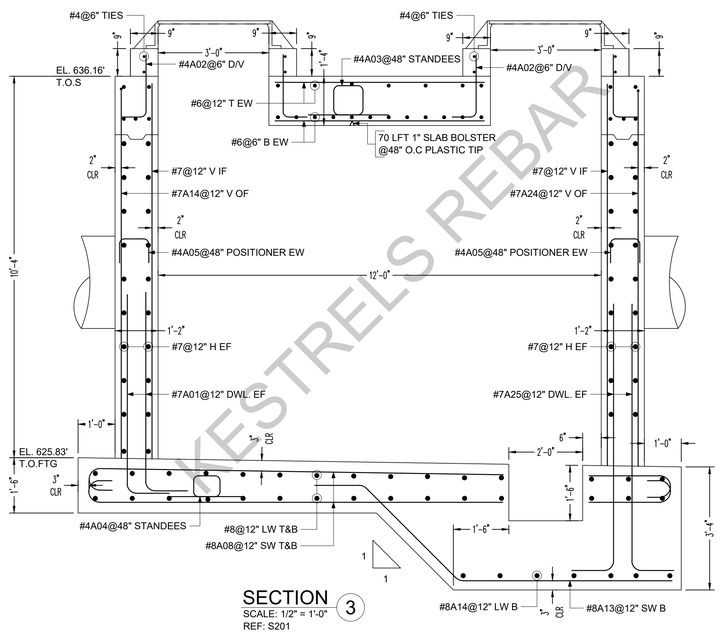

SECTION 3
SCALE: 1/2" = 1'-0"
REF: S201

ABBREVIATIONS	
TOP	T
BOTTOM	B
TOP&BOTTOM	T&B
ADDITIONAL	ADD'L
CORNER BAR	COR.
VERTICAL	V
HORIZONTAL	H
EACH WAY	EW
EACH FACE	EF
INNER FACE	IF
OUTER FACE	OF
EACH SIDE	ES
DOWEL	DWL.
DOWEL/VERTICAL	D/V
LONG WAY BAR	LW
SHORT WAY BAR	SW

NOTES:-

1. TYPICAL CLEARANCES
FOOTING
   A) TOP - 2"
   B) SIDE - 3"
   C) BOTTOM - 3"
WALL
   D) SIDE - 2"
   E) END - 2"
ROOF SLAB
   F) TOP - 2"
   C) BOTTOM - 1"
2. TILT HOOK TO ACCOMODATE THE COVER, IF NEED
3. PROVIDE FIELD CUT AS REQUIRED LOCATIONS
4. BARS TO BE PLACED AT EQUAL SPACING U.O.N.
5. A/E/C PLEASE VERIFY THE ALL CLOUDED ITEMS

ALL BARS ARE ASTM A615 GRADE 60 BLACK

KESTRELS REBAR

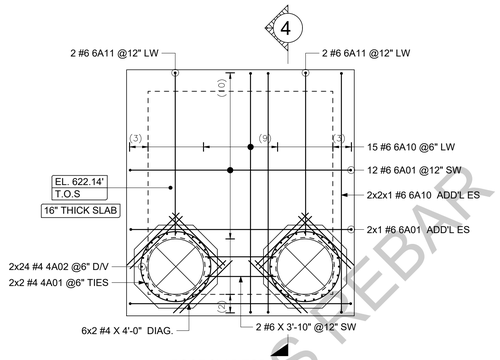

ROOF SLAB TOP BARS

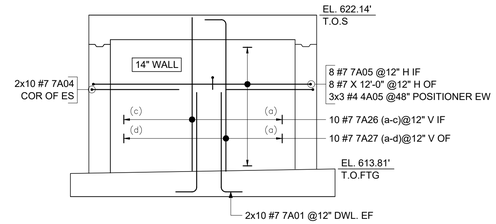

ELEVATION N
SCALE: 1/4" = 1'-0"
REF: S201

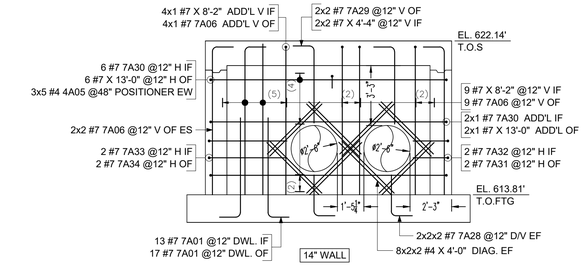

ELEVATION P
SCALE: 1/4" = 1'-0"
REF: S201

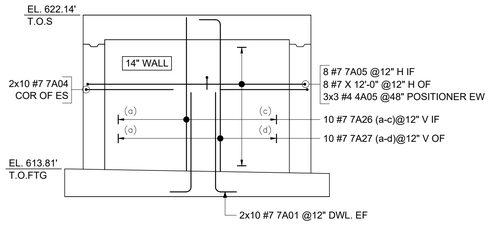

ELEVATION Q
SCALE: 1/4" = 1'-0"
REF: S201

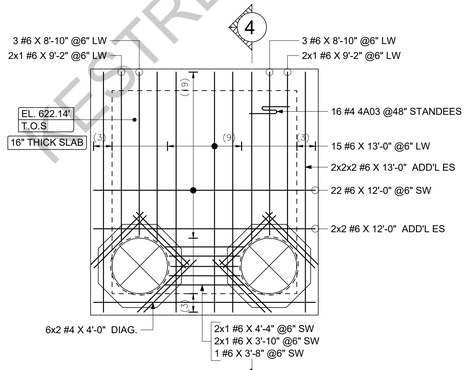

ROOF SLAB BOTTOM BARS

MANHOLE MH-S1-790 REINF. DETAILS

Scale - 1/4"=1'-0"
REF: S201

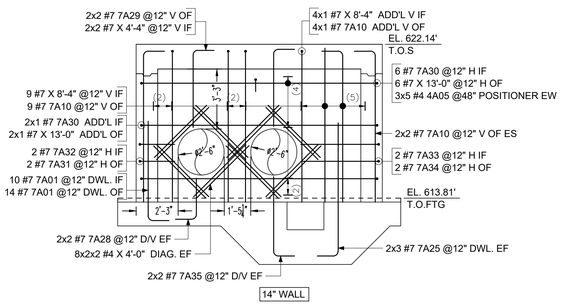

ELEVATION R
SCALE: 1/4" = 1'-0"
REF: S201

Drawing Sheet : R-01C					BAR LIST												
Bar Mark	Qty	Size	Total Length	Type	"A"	"B"	"C"	"D"	"E"	"F"	"G"	"H"	"J"	"K"	"O"	"R"
4A01	4	#4	14'-1 3/8"	13			12'-0 3/8"				2'-1"				3'-10"	
4A02	48	#4	2'-4 3/8"	2	0'-8"	1'-8 3/8"										
4A03	16	#4	5'-6 3/8"	25		1'-6"	0'-10 3/8"	0'-10"	0'-10 3/8"	1'-6"		0'-10"		0'-5"		
4A04	25	#4	5'-2"	25		1'-6"	0'-8"	0'-10"	0'-8"	1'-6"		0'-8"		0'-4"		
4A05	48	#4	2'-2"	2	0'-8"	0'-10"					0'-8"					
6A01	14	#6	14'-0"	2	1'-0"	12'-0"					1'-0"					
6A10	18	#6	15'-0"	2	1'-0"	13'-0"					1'-0"					
6A11	4	#6	9'-10"	2	1'-0"	8'-10"										
7A01	94	#7	6'-7"	2	1'-2"	5'-5"										
7A04	40	#7	9'-6"	17		4'-9"	4'-9"									
7A05	16	#7	14'-2"	2	1'-2"	11'-10"					1'-2"					
7A06	17	#7	9'-2 3/8"	2	1'-2"	8'-0 3/8"										
7A10	17	#7	9'-4 3/8"	2	1'-2"	8'-2 3/8"										
7A25	6	#7	8'-5"	2	1'-2"	7'-3"										
7A26a	8	#7	8'-2"			8'-2"										
Varies To																
7A26c	4	#7	8'-3"			8'-3"										
7A27a	6	#7	9'-3"	2	1'-2"	8'-1"										
Varies To																
7A27d	2	#7	9'-5"	2	1'-2"	8'-3"										
7A28	12	#7	3'-5"	2	1'-2"	2'-3"										
7A29	8	#7	5'-4 3/8"	2	1'-2"	4'-2 3/8"										
7A30	16	#7	15'-2"	2	1'-2"	12'-10"					1'-2"					
7A31	4	#7	6'-8"	17		1'-11"	4'-9"									
7A32	4	#7	3'-1"	2	1'-2"	1'-11"										
7A33	4	#7	5'-5"	2	1'-2"	4'-3"										
7A34	4	#7	9'-0 3/8"	17		4'-3 3/8"	4'-9"									
7A35	4	#7	5'-6"	2	1'-2"	4'-4"										
8A01	28	#8	15'-8"	1	0'-11"	13'-10"					0'-11"		0'-8"			
8A07	4	#8	4'-8"	1	0'-11"	3'-9"							0'-8"			
8A09	4	#8	3'-2"	1	0'-11"	2'-3"							0'-8"			
8A10	28	#8	16'-8"	1	0'-11"	14'-10"					0'-11"		0'-8"			
8A11	4	#8	9'-8"	1	0'-11"	8'-9"							0'-8"			
8A12	4	#8	10'-2"	1	0'-11"	9'-3"							0'-8"			
8A13	6	#8	10'-9 3/8"	3		1'-4"	3'-8"	5'-9 3/8"				2'-8"		2'-6 3/8"	9'-8"	
8A14	7	#8	13'-2"	3		1'-4"	3'-6 7/8"	4'-8 3/8"	3'-6 7/8"			2'-7"		2'-5 3/8"	10'-11 3/8"	

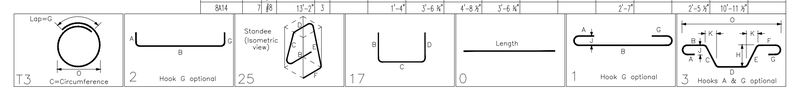

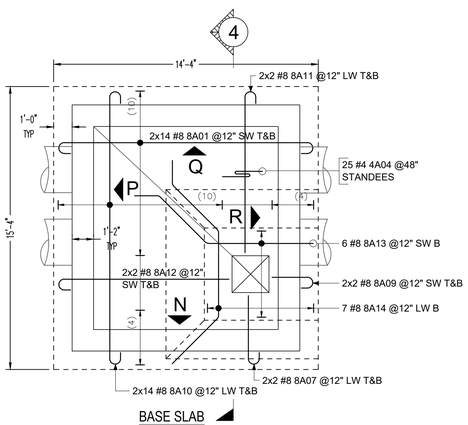

BASE SLAB

MANHOLE MH-S1-790 REINF. DETAILS

Scale - 1/4"=1'-0"
REF: S201

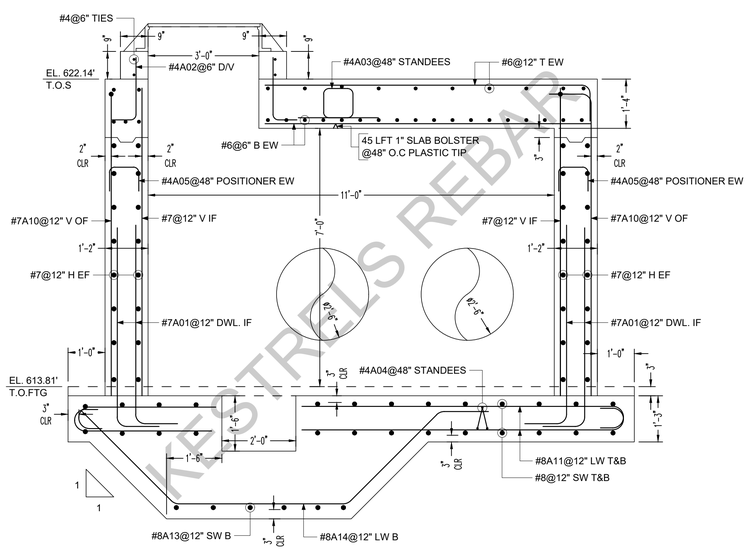

SECTION 4
SCALE: 1/2" = 1'-0"
REF: S201

ABBREVIATIONS	
TOP	T
BOTTOM	B
TOP&BOTTOM	T&B
ADDITIONAL	ADD'L
CORNER BAR	COR.
VERTICAL	V
HORIZONTAL	H
EACH WAY	EW
EACH FACE	EF
INNER FACE	IF
OUTER FACE	OF
EACH SIDE	ES
DOWEL	DWL.
DOWEL/VERTICAL	D/V
LONG WAY BAR	LW
SHORT WAY BAR	SW

NOTES:-

1. TYPICAL CLEARANCES
   FOOTING
   - A) TOP - 2"
   - B) SIDE - 3"
   - C) BOTTOM - 3"
   WALL
   - D) SIDE - 2"
   - E) END - 2"
   ROOF SLAB
   - F) TOP - 2"
   - C) BOTTOM - 1"
2. TILT HOOK TO ACCOMODATE THE COVER, IF NEED
3. PROVIDE FIELD CUT AS REQUIRED LOCATIONS
4. BARS TO BE PLACED AT EQUAL SPACING U.O.N.
5. A/E/C PLEASE VERIFY THE ALL CLOUDED ITEMS

ALL BARS ARE ASTM A615 GRADE 60 BLACK

KESTRELS REBAR

Drawing Sheet : R-02					BAR LIST											
Bar Mark	Qty	Size	Total Length	Type	'A'	'B'	'C'	'D'	'E'	'F'	'G'	'H'	'J'	'K'	'O'	'R'
4B01	184	#4	4'-9"	T2	0'-4 ½"	0'-9"	1'-3"	0'-9"	1'-3"		0'-4 ½"					
4B03	304	#4	5'-6"	17		2'-9"	2'-9"									
4B04	20	#4	5'-8"	17		1'-8"	4'-0"									
4B05	608	#4	3'-5"	2	0'-8"	2'-9"										
4B06	72	#4	5'-0"	17		2'-6"	2'-6"									

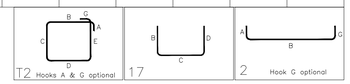

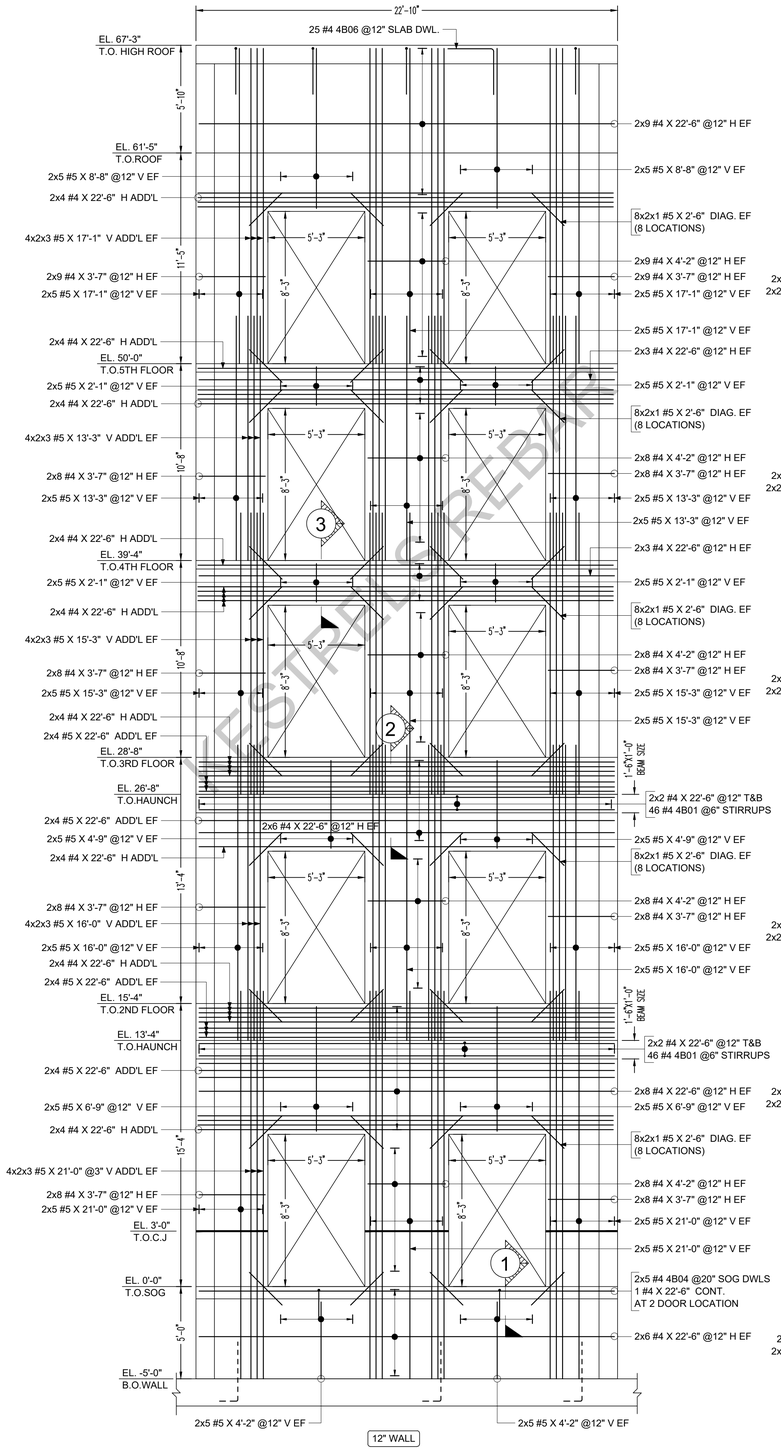

ELEVATION (A)
SCALE: 1/4" = 1'-0"
REF: S2.0 S8.0, & S9.0

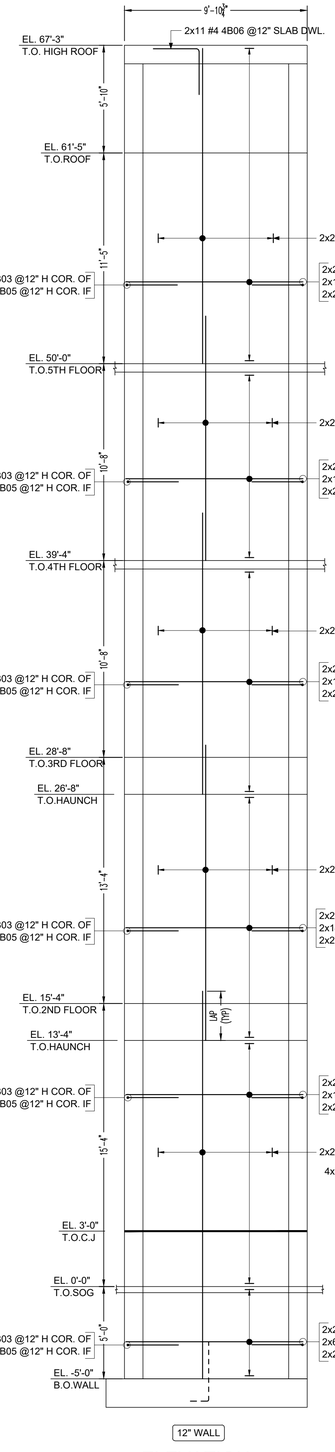

ELEVATION (B)
SCALE: 1/4" = 1'-0"
REF: S2.0 S8.0, & S9.0
2 LOCATION

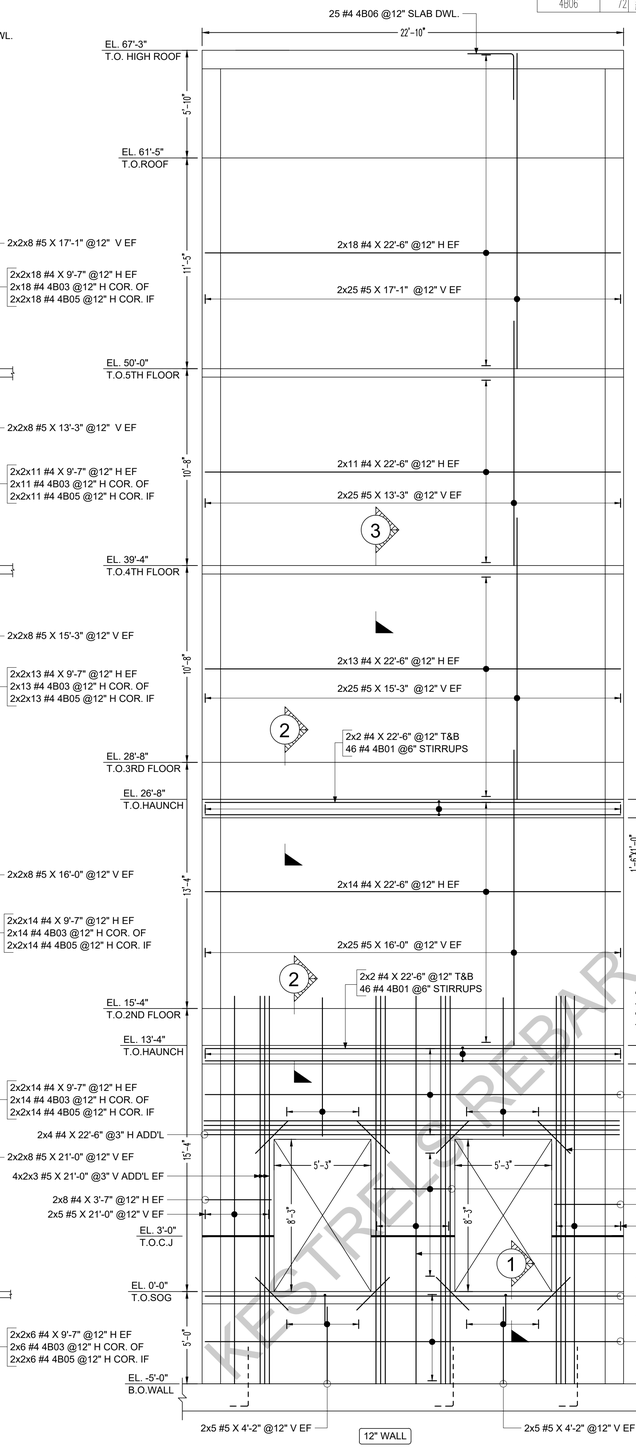

ELEVATION (C)
SCALE: 1/4" = 1'-0"
REF: S2.0 S8.0, & S9.0

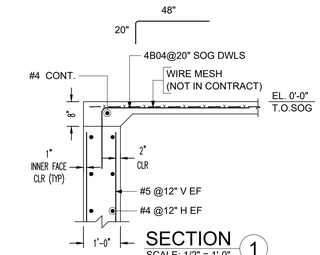

SECTION (1)
SCALE: 1/2" = 1'-0"
REF: 2/S8.0

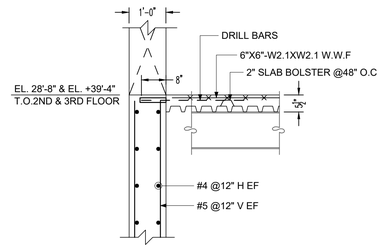

SECTION (3)
SCALE: 1/2" = 1'-0"
REF: 15/S9.0

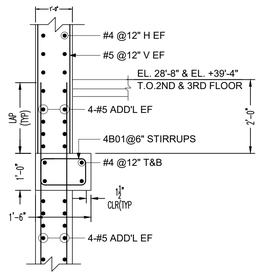

SECTION (2)
SCALE: 1/2" = 1'-0"
REF: 20/S9.0

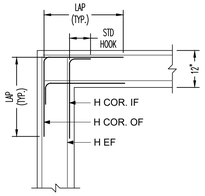

TYP CORNER DETAIL

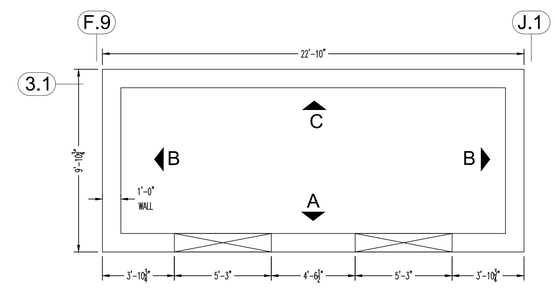

CONCRETE WALL PLAN
SCALE: 1/4" = 1'-0"

ABBREVIATIONS	
CORNER BAR	COR.
DOWELS	DWLS
TOP	T
BOTTOM	B
EACH FACE	EF
EACH SIDE	ES
CONTINUOUS	CONT.
VERTICAL	V
HORIZONTAL	H
OUTER FACE	OF
INNER FACE	IF
TOP OF WALL	T.O.W
BOTTOM OF WALL	B.O.W
TOP OF SLAB	T.O.S

LAP SCHEDULE FOR WALLS (CLASS-B)		
SIZE	4000 PSI	
	TOP	OTHER
#3	24"	19"
#4	32"	25"
#5	40"	31"
#6	48"	37"
#7	70"	54"
#8	80"	62"
#9	91"	70"
#10	102"	79"
#11	113"	87"

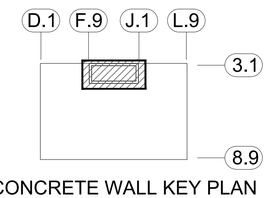

CONCRETE WALL KEY PLAN
N.T.S

NOTES:-
1. TYPICAL CLEARANCES
CONCRETE WALLS
A) TOP & END - 2"
B) EXTERIOR FACE - 2"
C) INTERIOR FACE - 1"
2. PROVIDE FIELD CUT AS REQUIRED LOCATIONS
3. BARS TO BE PLACED AT EQUAL SPACING U.O.N.
4. TILT HOOK TO ACCOMODATE THE COVER, IF NEED

ALL BARS ARE ASTM A615 GRADE 60 BLACK

KESTREL REBAR

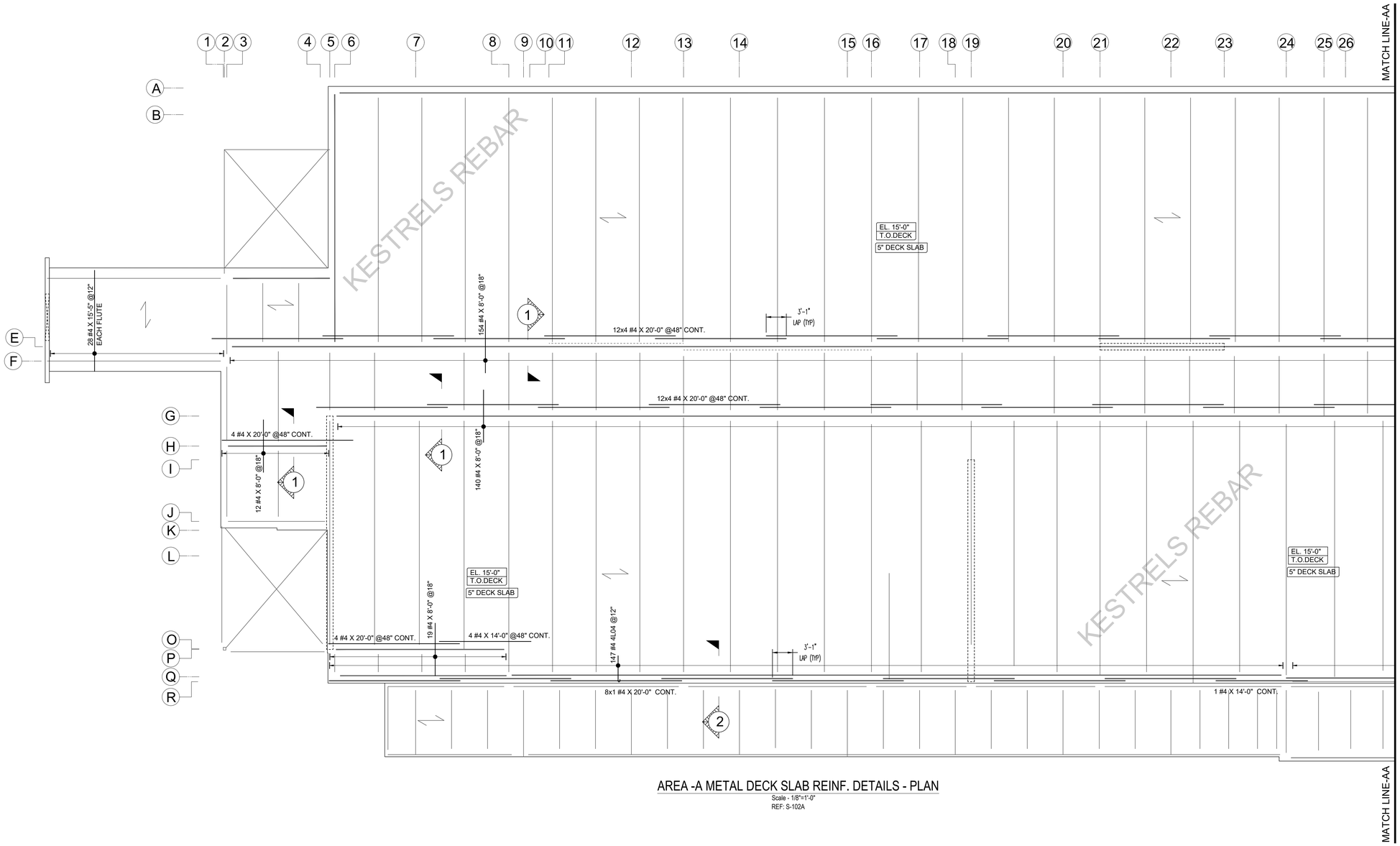

AREA -A METAL DECK SLAB REINF. DETAILS - PLAN

Scale - 1/8"=1'-0"

REF: S-102A

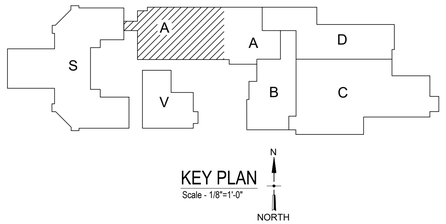

KEY PLAN

Scale - 1/8"=1'-0"

LAP SCHEDULE FOR LIGHT WIGHT CONCRETE (CLASS-B)	
SIZE	3000 PSI
	OTHER
#3	28"
#4	37"
#5	47"
#6	56"
#7	81"
#8	93"
#9	105"
#10	118"
#11	131"

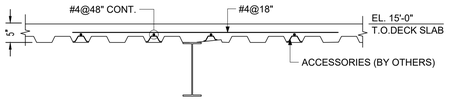

SECTION 1

SCALE: 1/2" = 1'-0"

REF: 1/S-302

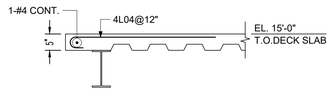

SECTION 2

SCALE: 1/2" = 1'-0"

REF: 19/S-301

ABBREVIATIONS	
CORNER BAR	COR.
CONTINUOUS	CONT.
LONG WAY	LW
SHORT WAY	SW

NOTES:-

1. TYPICAL CLEARANCES
DECK SLAB
   A) TOP - 2"
   B) SIDE - 2"
2. PROVIDE FIELD CUT AS REQUIRED LOCATIONS
3. BARS TO BE PLACED AT EQUAL SPACING U.O.N.
4. TILT HOOK TO ACCOMODATE THE COVER, IF NEED

ALL BARS ARE ASTM A615 GRADE 60 BLACK

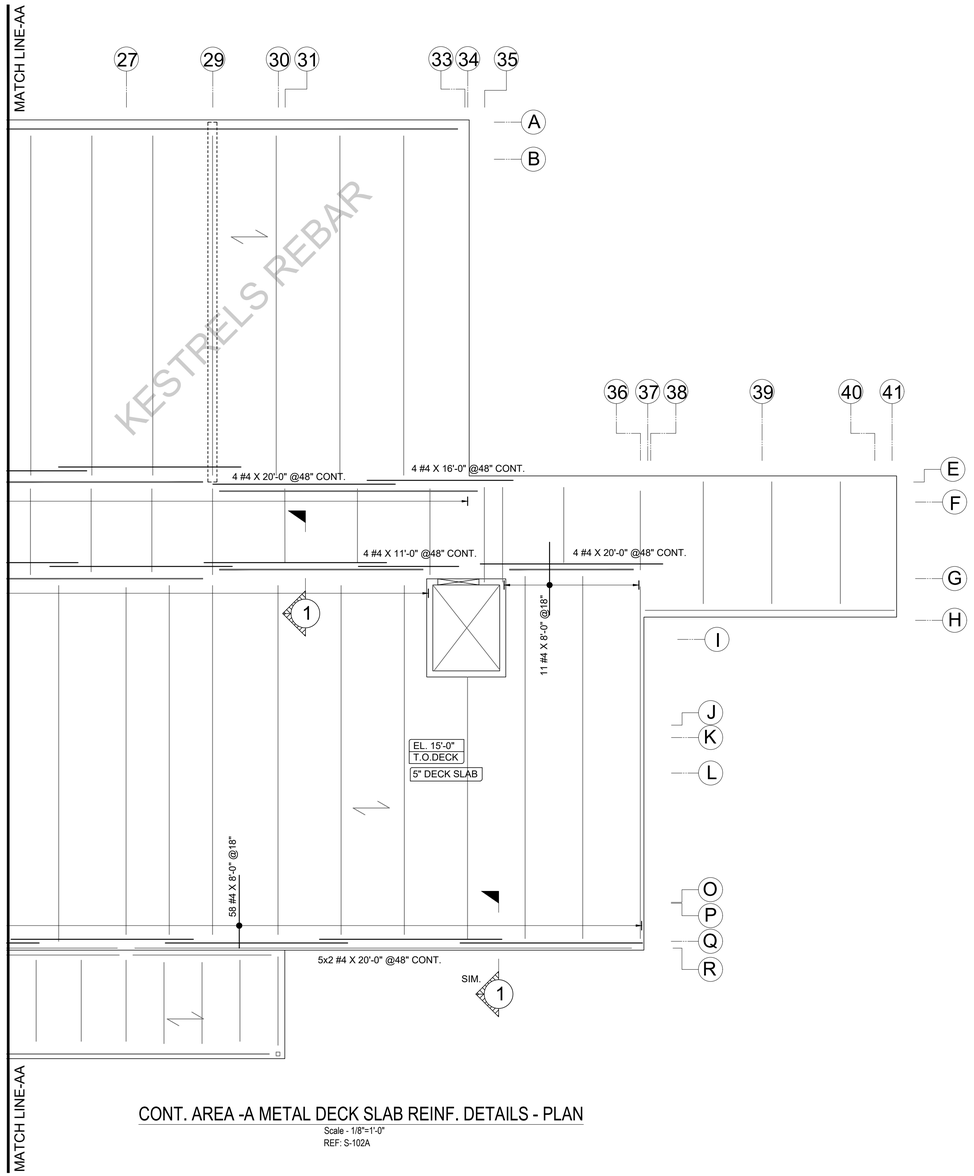

CONT. AREA -A METAL DECK SLAB REINF. DETAILS - PLAN

Scale - 1/8"=1'-0"
REF: S-102A

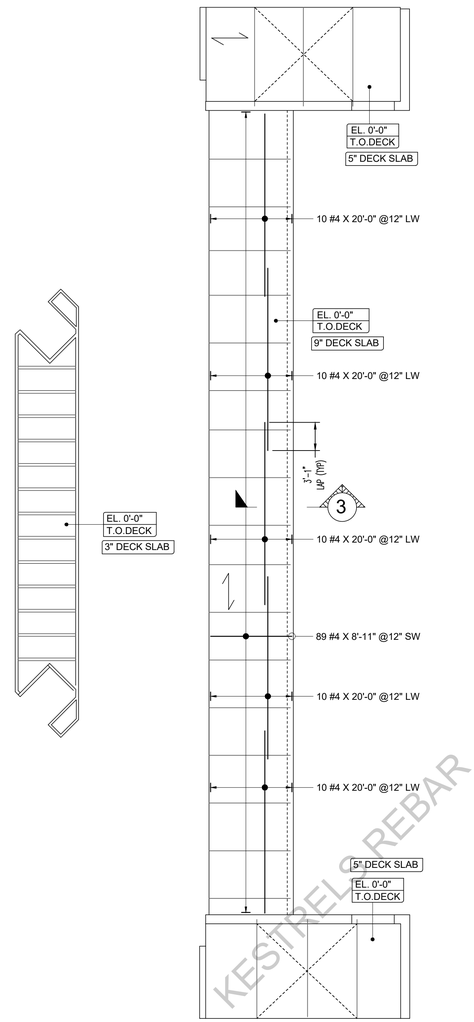

AREA -S METAL DECK SLAB REINF. DETAILS - PLAN

Scale - 1/8"=1'-0"
REF: S-101S2

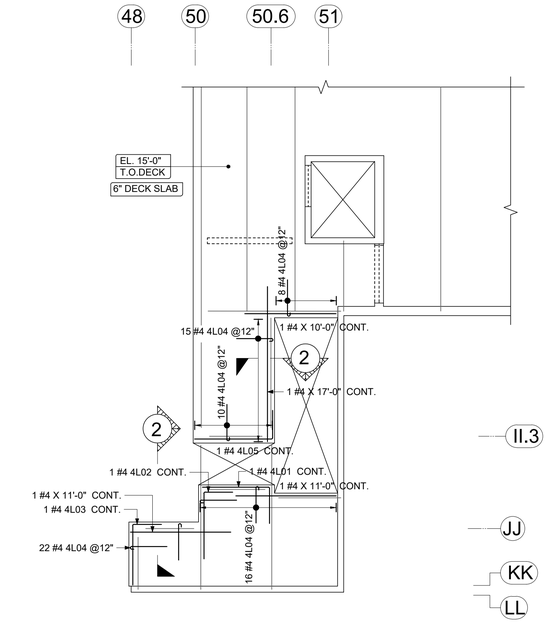

AREA -C METAL DECK SLAB REINF. DETAILS - PLAN

Scale - 1/8"=1'-0"
REF: S-102C

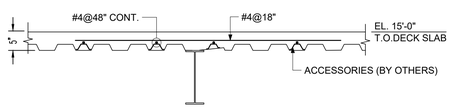

SECTION 1

SCALE: 1/2" = 1'-0"
REF: 1/S-302

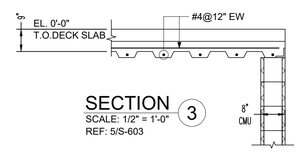

SECTION 3

SCALE: 1/2" = 1'-0"
REF: 5/S-603

LAP SCHEDULE FOR LIGHT WIGHT CONCRETE (CLASS-B)	
SIZE	3000 PSI
	OTHER
#3	28"
#4	37"
#5	47"
#6	56"
#7	81"
#8	93"
#9	105"
#10	118"
#11	131"

Drawing Sheet : R-09 — BAR LIST

Bar Mark	Qty	Size	Total Length	Type	'A'	'B'	'C'	'D'	'E'	'F'	'G'	'H'	'J'	'K'	'O'	'W'
4L01	1	#4	12'-0"	17		4'-0"	8'-0"									
4L02	1	#4	10'-4"	17		3'-2"	7'-4"									
4L03	1	#4	9'-10"	17		3'-2"	6'-8"									
4L04	218	#4	4'-6"	1	0'-6"	4'-0"							0'-4"			
4L05	1	#4	11'-9"	17		3'-2"	8'-7"									

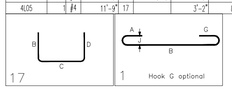

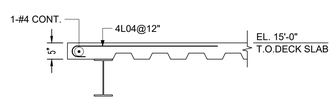

SECTION 2

SCALE: 1/2" = 1'-0"
REF: 19/S-301

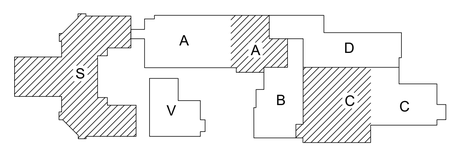

KEY PLAN

Scale - 1/8"=1'-0"

N
NORTH

ABBREVIATIONS	
CORNER BAR	COR.
CONTINUOUS	CONT.
LONG WAY	LW
SHORT WAY	SW

NOTES:-

1. TYPICAL CLEARANCES
DECK SLAB
A) TOP - 2"
B) SIDE - 2"
2. PROVIDE FIELD CUT AS REQUIRED LOCATIONS
3. BARS TO BE PLACED AT EQUAL SPACING U.O.N.
4. TILT HOOK TO ACCOMODATE THE COVER, IF NEED

ALL BARS ARE ASTM A615 GRADE 60 BLACK

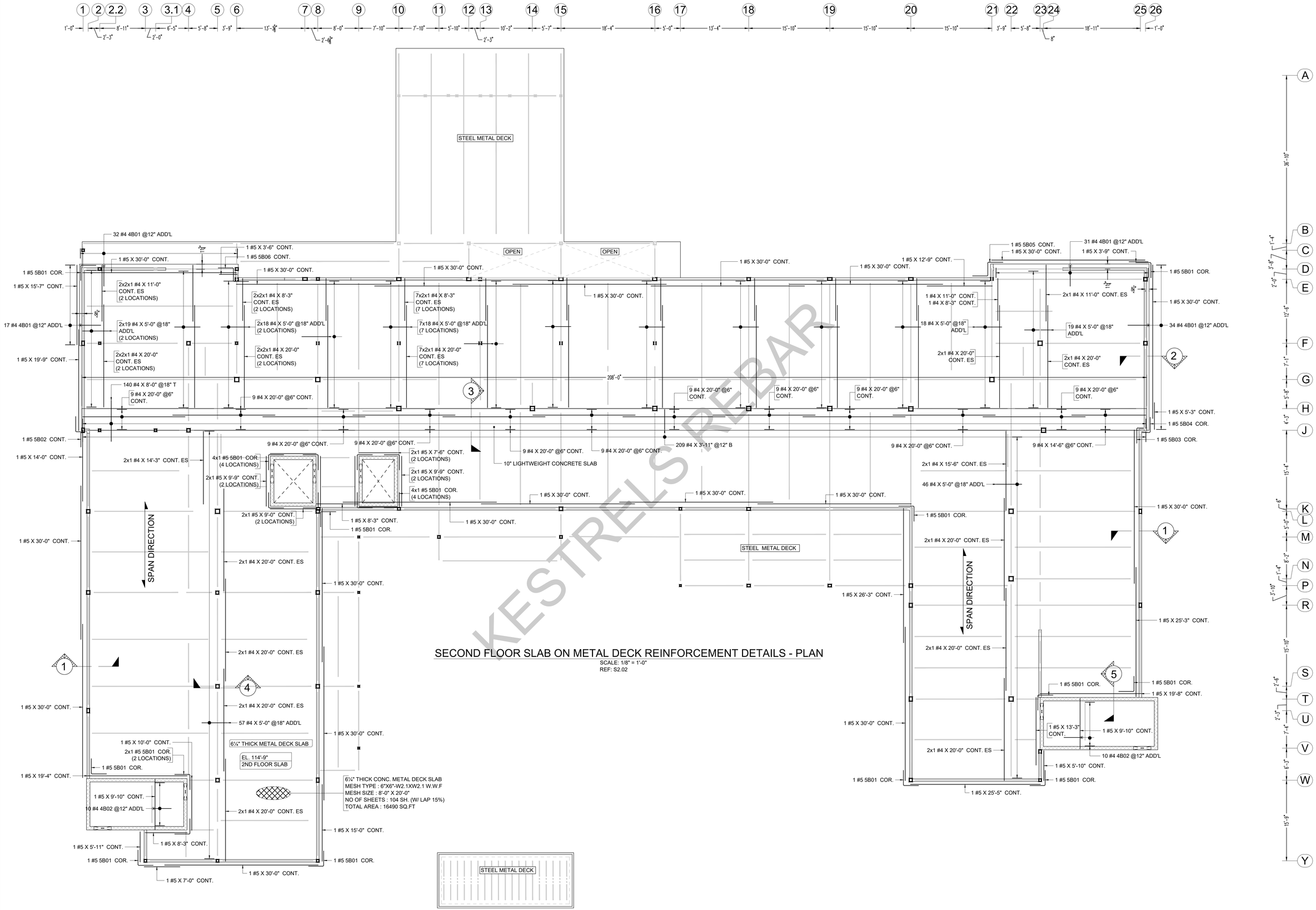

SECOND FLOOR SLAB ON METAL DECK REINFORCEMENT DETAILS - PLAN

SCALE: 1/8" = 1'-0"
REF: S2.02

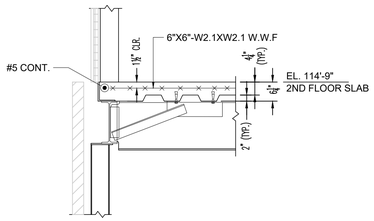

SECTION 1
SCALE: 1/2" = 1'-0"
REF: 2/S4.01

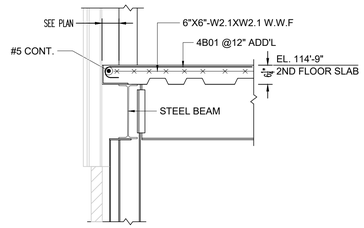

SECTION 2
SCALE: 1/2" = 1'-0"
REF: 4/S4.01

Drawing Sheet : R-05									BENDING DETAILS							
Bar Mark	Qty	Size	Total Length	Type	'A'	'B'	'C'	'D'	'E'	'F'	'G'	'H'	'J'	'K'	'O'	'R'
4B01	114	#4	4'-6"	1	0'-6"	4'-0"							0'-4"			
5B01	21	#5	6'-0"	17		3'-0"	3'-0"									
5B04	1	#5	4'-7"	17		1'-7"	3'-0"									
5B03	1	#5	4'-4"	17		1'-4"	3'-0"									
5B06	1	#5	8'-8 ¼"	20		3'-0"	2'-8 ¼"	3'-0"								
5B02	1	#5	7'-0 ½"	20		3'-0"	1'-0 ½"	3'-0"								
5B05	1	#5	8'-8 ½"	20		3'-0"	2'-8 ½"	3'-0"								
4B02	20	#4	4'-0"	1	0'-6"	3'-6"							0'-4"			

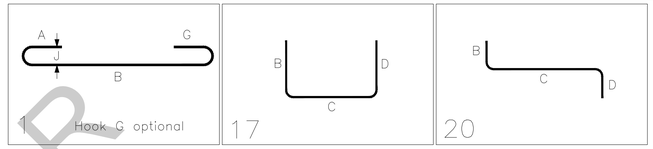

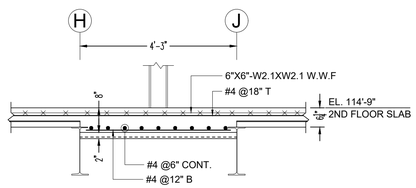

SECTION 3
SCALE: 1/2" = 1'-0"
REF: 11/S4.04

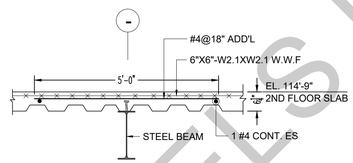

SECTION 4
SCALE: 1/2" = 1'-0"
REF: 7/S1.06

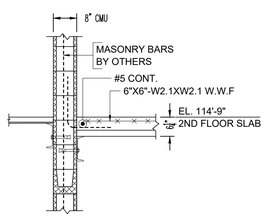

SECTION 5
SCALE: 1/2" = 1'-0"
REF: 3/S4.02

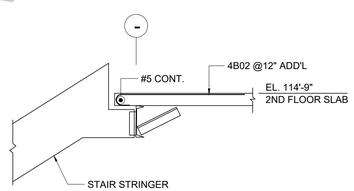

TYPICAL STAIR STRINGER DETAIL
SCALE: 1/2" = 1'-0"
REF: 13/S1.06

LAP SCHEDULE FOR METAL DECK (CLASS-B)		
SIZE	3000 PSI	
	TOP	OTHER
#3	28"	22"
#4	37"	29"
#5	47"	36"
#6	56"	43"
#7	81"	63"
#8	93"	72"
#9	105"	81"
#10	118"	91"
#11	131"	101"

ENGINEER CONFIRM THE LAP SCHEDULE

NOTES:-

1. TYPICAL CLEARANCES
   METAL DECK
   A). TOP - 1½"
   B). END - 2"
2. A/E/C PLEASE VERIFY THE ALL CLOUDED ITEMS
3. PROVIDE FIELD CUT AS REQUIRED LOCATIONS
4. BARS TO BE PLACED AT EQUAL SPACING U.O.N.
5. TILT HOOK TO ACCOMODATE THE COVER, IF NEED

ALL BARS ARE ASTM A615 GRADE 60 BLACK

KESTREL REBARS

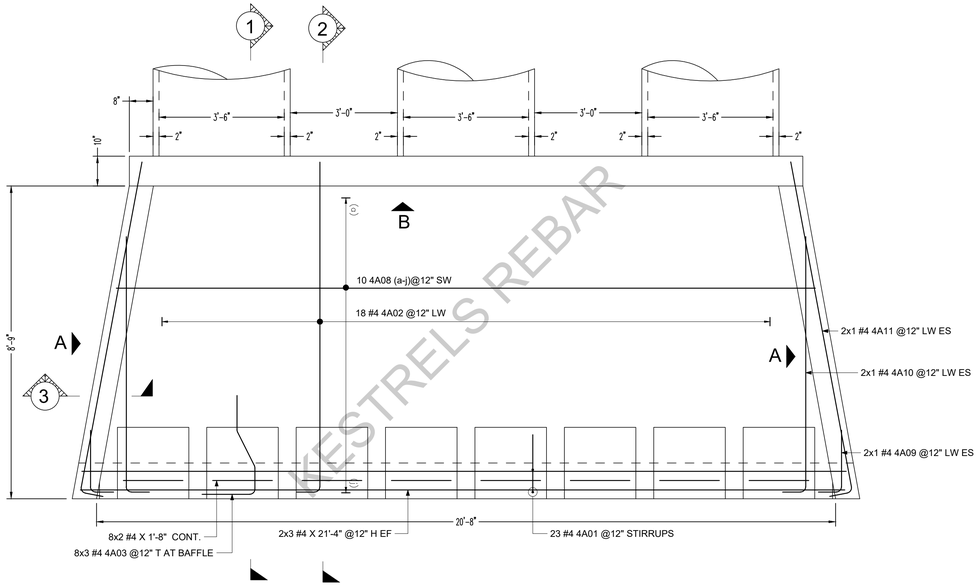

OUTLET HEADWALL REINF. DETAILS

Scale - 1/2"=1'-0"
REF: 1125

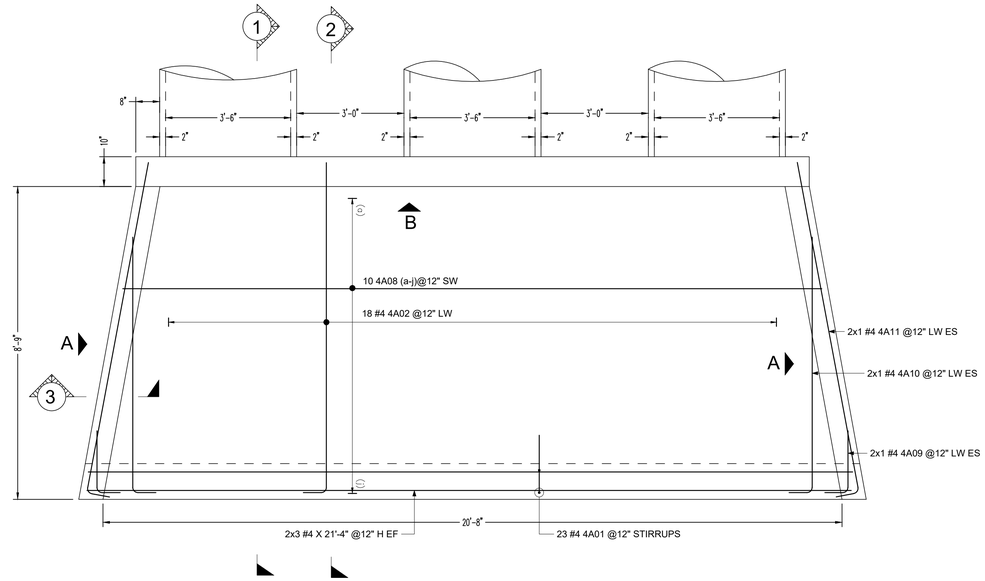

INLET HEADWALL REINF. DETAILS

Scale - 1/2"=1'-0"
REF: 1125

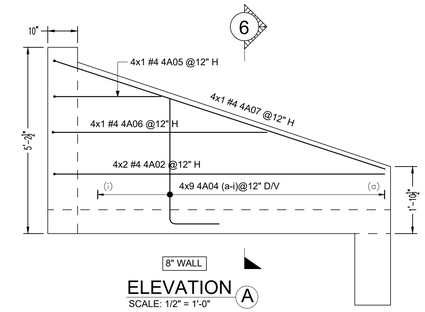

ELEVATION A

SCALE: 1/2" = 1'-0"
REF: A/1125
(4 LOCATIONS)

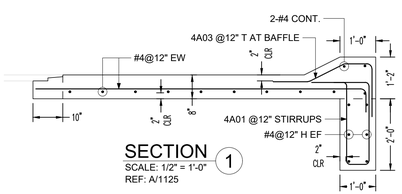

SECTION 1

SCALE: 1/2" = 1'-0"
REF: A/1125

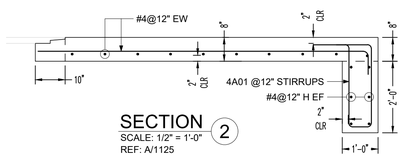

SECTION 2

SCALE: 1/2" = 1'-0"
REF: A/1125

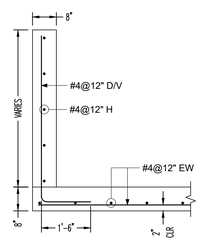

SECTION 3

SCALE: 1/2" = 1'-0"
REF: C/1125

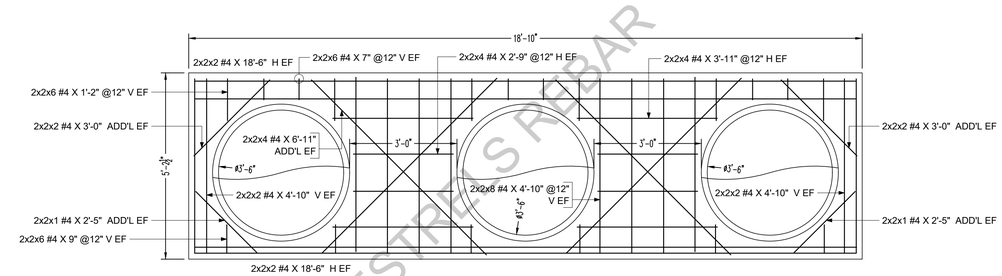

ELEVATION B

SCALE: 1/2" = 1'-0"
REF: B/1125
(2 LOCATIONS)

Drawing Sheet : R-01 — BAR LIST

Bar Mark	Qty	Size	Total Length	Type	'A'	'B'	'C'	'D'	'E'	'F'	'G'	'H'	'J'	'K'	'O'	'R'
4A01	46	#4	7'-4"	S5	1'-0"	2'-4"	0'-8"	2'-4"			1'-0"					
4A02	44	#4	9'-11"	2	0'-8"	9'-3"										
4A03	24	#4	4'-4 ¼"	4	1'-6"	0'-9 ½"	1'-1 ¼"	1'-0"				0'-6 ½"		0'-11 ¼"	2'-9 ¼"	
4A04a	4	#4	3'-0"	17		1'-6"	1'-6"									
Varies To																
4A04i	4	#4	5'-8"	17		1'-6"	4'-2"									
4A05	4	#4	3'-8"	2	0'-8"	3'-0"										
4A06	4	#4	6'-8"	2	0'-8"	6'-0"										
4A07	4	#4	10'-5"	2	0'-8"	9'-9"										
4A08a	2	#4	18'-7"			18'-7"										
Varies To																
4A08j	2	#4	21'-7"			21'-7"										
4A09	4	#4	2'-5"	2	0'-8"	1'-9"										
4A10	4	#4	7'-10"	2	0'-8"	7'-2"										
4A11	4	#4	10'-1"	2	0'-8"	9'-5"										

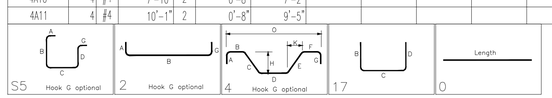

ABBREVIATIONS	
TOP & BOTTOM	T&B
CONTINUOUS	CONT.
TRANSVERSE	TRANS.
DOWEL/VERTICAL	D/V
VERTICAL	V
HORIZONTAL	H
EACH FACE	EF
BOTTOM OF FOOTING	B.O.F

NOTES:-

1. TYPICAL CLEARANCES
   SLAB & WALL
   A) TOP - 2"
   B) SIDE - 2"
   C) BOTTOM - 2"
2. PROVIDE FIELD CUT AS REQUIRED LOCATIONS
3. BARS TO BE PLACED AT EQUAL SPACING U.O.N.
4. TILT HOOK TO ACCOMODATE THE COVER, IF NEED

ALL BARS ARE ASTM A615 GRADE 60 BLACK

THIS DRAWING TO BE USED FOR REBAR PLACEMENT ONLY

FOR FILE & FIELD USE

ALL BARS IN THIS DRAWING ASTM A615 GRADE 60 BLACK UNCOATED (U.N.O.)

KESTRELS REBAR

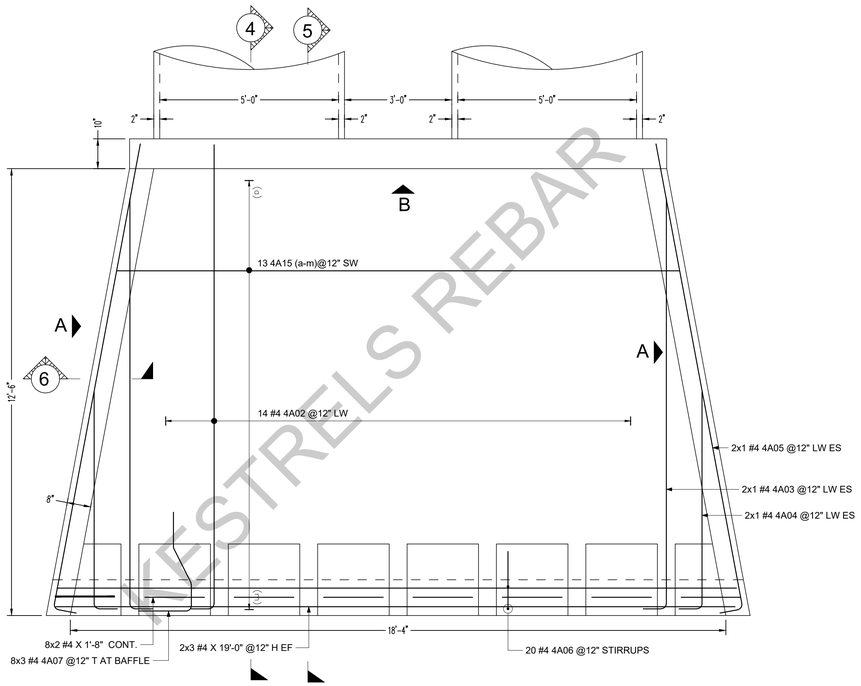

OUTLET HEADWALL REINF. DETAILS

Scale - 1/2"=1'-0"
REF: 1125

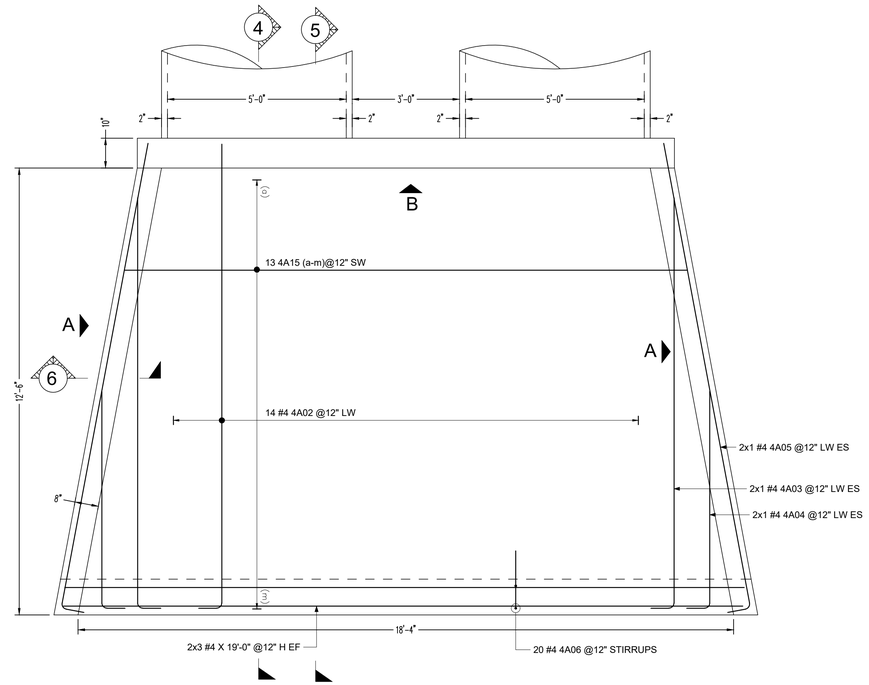

INLET HEADWALL REINF. DETAILS

Scale - 1/2"=1'-0"
REF: 1125

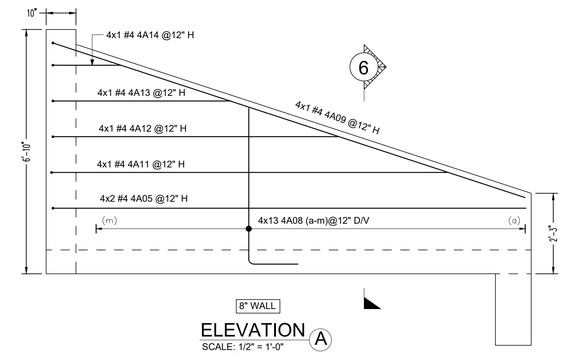

ELEVATION A

SCALE: 1/2" = 1'-0"
REF: A/1125
(4 LOCATIONS)

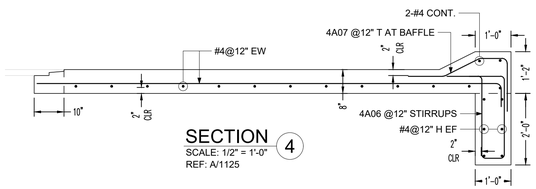

SECTION 4

SCALE: 1/2" = 1'-0"
REF: A/1125

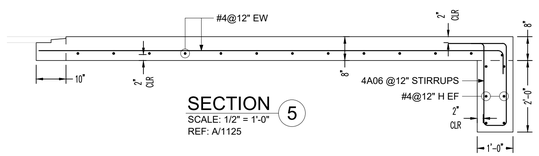

SECTION 5

SCALE: 1/2" = 1'-0"
REF: A/1125

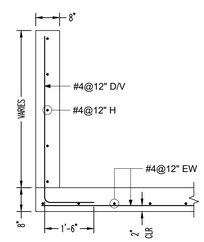

SECTION 6

SCALE: 1/2" = 1'-0"
REF: C/1125

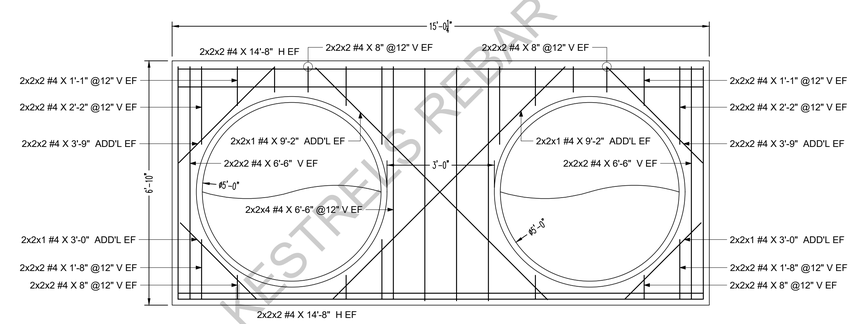

ELEVATION B

SCALE: 1/2" = 1'-0"
REF: B/1125
(2 LOCATIONS)

Drawing Sheet : R-01A							BAR LIST										
Bar Mark	Qty	Size	Total Length	Type	'A'	'B'	'C'	'D'	'E'	'F'	'G'	'H'	'J'	'K'	'O'	'R'
4A02	28	#4	13'-8"	2	0'-8"	13'-0"										
4A03	4	#4	12'-2"	2	0'-8"	11'-6"										
4A04	4	#4	6'-9"	2	0'-8"	6'-1"										
4A05	12	#4	13'-11"	2	0'-8"	13'-3"										
4A06	40	#4	7'-4"	S5	1'-0"	2'-4"	0'-8"	2'-4"			1'-0"					
4A07	24	#4	4'-5"	4	1'-6"	0'-9 ½"	1'-1 ½"	1'-0"				0'-6 ½"		0'-11 ¾"	2'-9 ¾"	
4A08a	4	#4	3'-4"	17		1'-6"	1'-10"									
Varies To																
4A08m	4	#4	7'-4"	17		1'-6"	5'-10"									
4A09	4	#4	14'-7"	2	0'-8"	13'-11"										
4A11	4	#4	11'-9"	2	0'-8"	11'-1"										
4A12	4	#4	8'-8"	2	0'-8"	8'-0"										
4A13	4	#4	5'-6"	2	0'-8"	5'-0"										
4A14	4	#4	2'-7"	2	0'-8"	1'-11"										
4A15a	2	#4	14'-10"			14'-10"										
Varies To																
4A15m	2	#4	19'-3"			19'-3"										

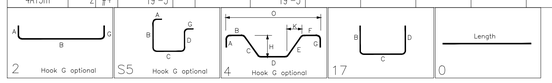

THIS DRAWING TO BE USED
FOR REBAR PLACEMENT ONLY

FOR FILE & FIELD USE

ALL BARS IN THIS DRAWING
ASTM A615 GRADE 60
BLACK UNCOATED (U.N.O.)

KESTRELS REBAR

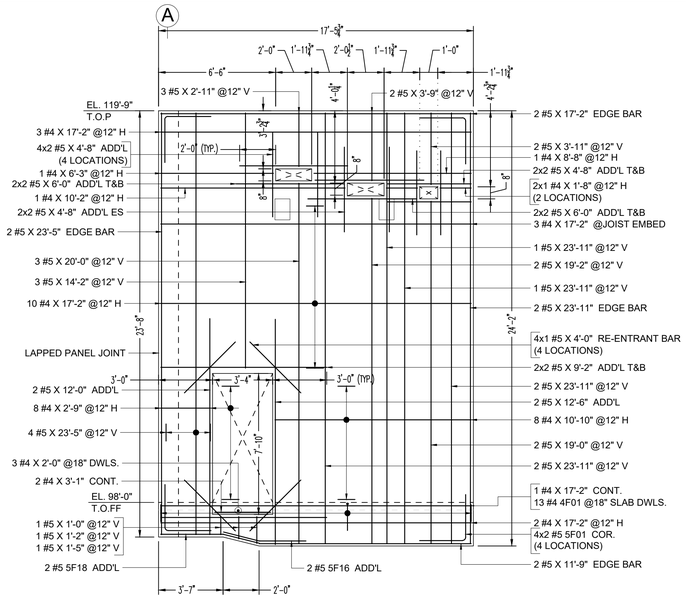

7 ¼" THICK

PANEL OP-1

REF: S1.0C,S2.0C,S3.0C & S5.0C

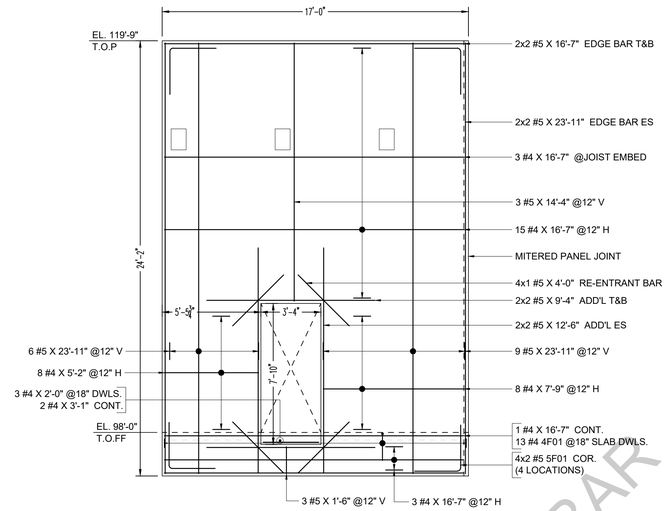

7 ¼" THICK

PANEL OP-2

REF: S1.0C,S2.0C,S3.0C & S5.0C

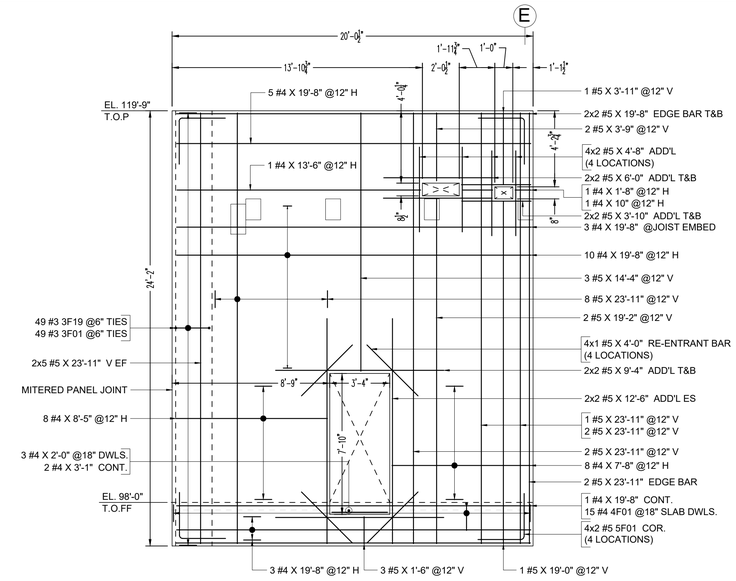

PANEL OP-3

7 ¼" THICK

REF: S1.0C,S2.0C,S3.0C & S5.0C

KESTRELS REBAR

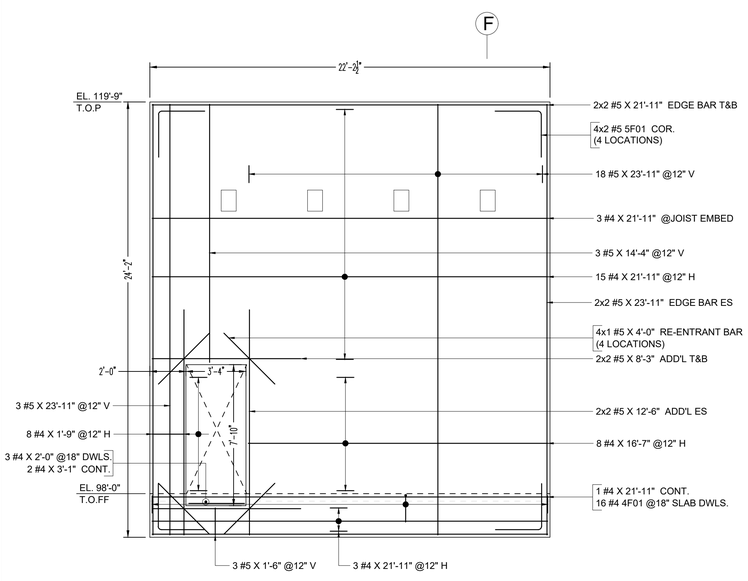

7 ¼" THICK

PANEL OP-4

REF: S1.0C,S2.0C,S3.0C & S5.0C

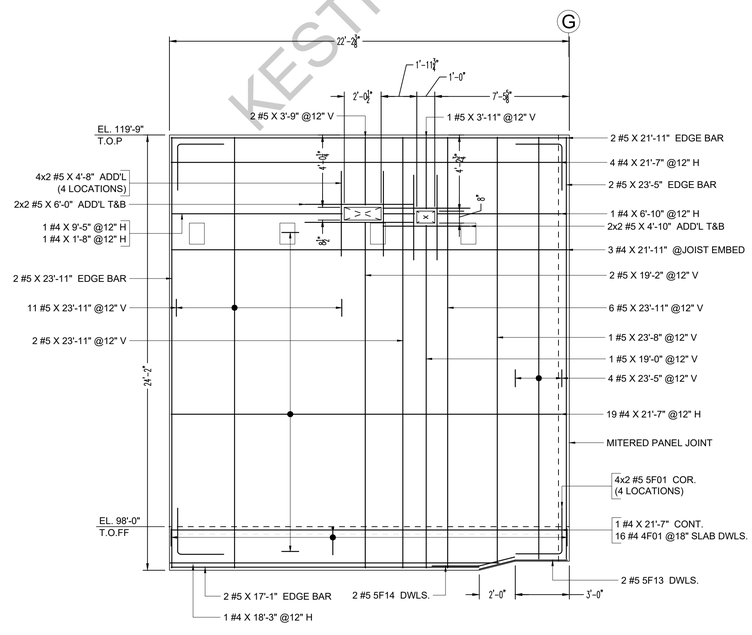

7 ¼" THICK

PANEL OP-5

REF: S1.0C,S2.0C,S3.0C & S5.0C

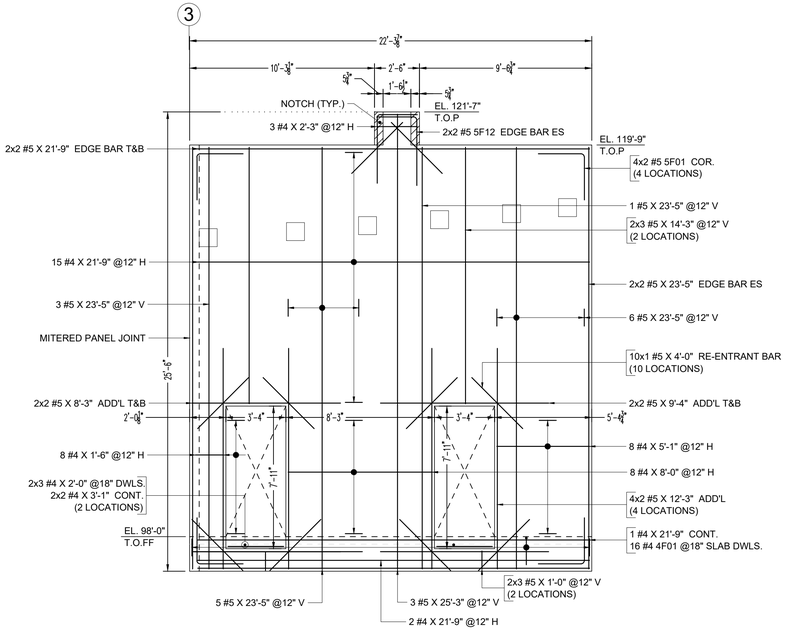

7 ¼" THICK

PANEL P-6

REF: S1.0C,S2.0C,S3.0C & S5.0C

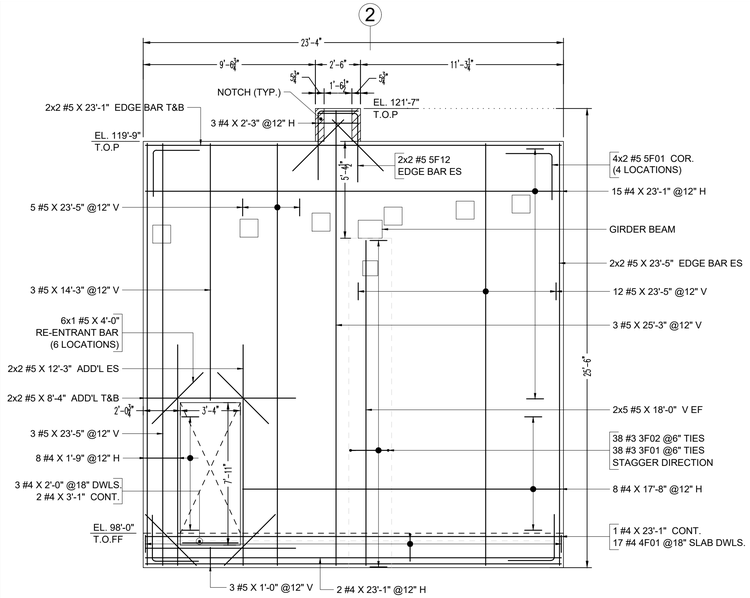

7 ¼" THICK

PANEL P-7

REF: S1.0C,S2.0C,S3.0C & S5.0C

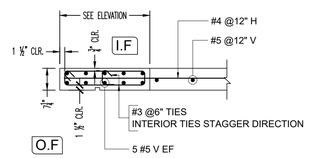

@PANEL LEG - OP-8,OP-9,LP-10 & OP-11

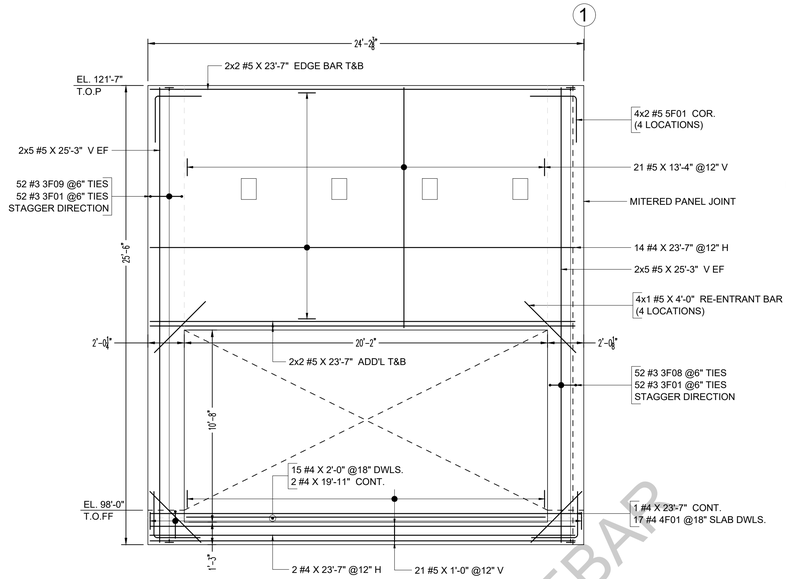

7 ¼" THICK

PANEL OP-8

REF: S1.0C,S2.0C,S3.0C & S5.0C

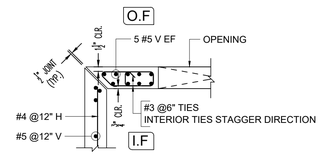

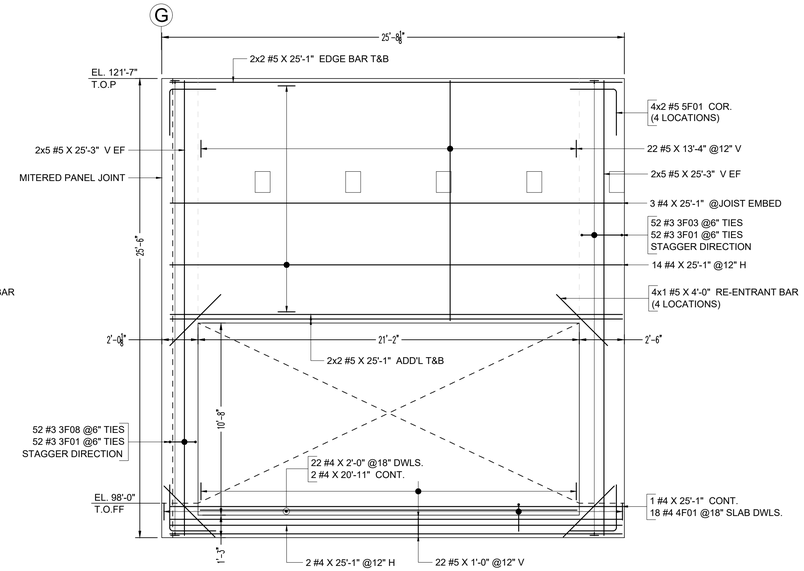

7 ¼" THICK

PANEL OP-9

REF: S1.0C,S2.0C,S3.0C & S5.0C

@PANEL LEG - OP-8,OP-9 & LP-12

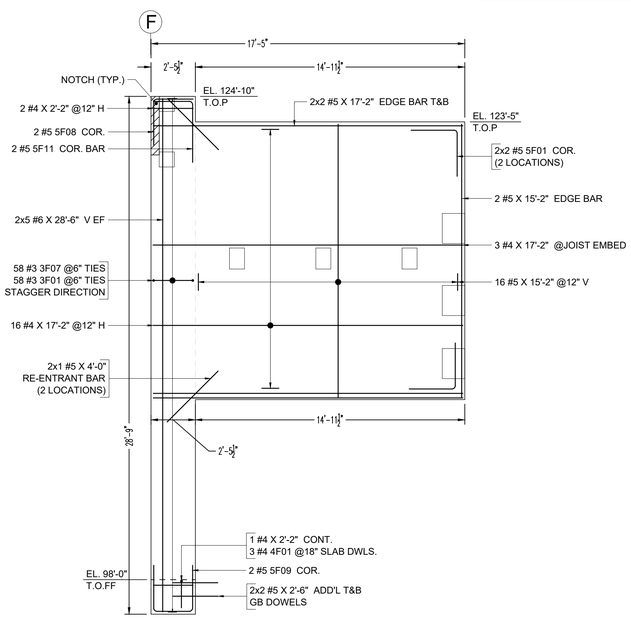

7 ¼" THICK

PANEL LP-10

REF: S1.0C,S2.0C,S3.0C & S5.0C

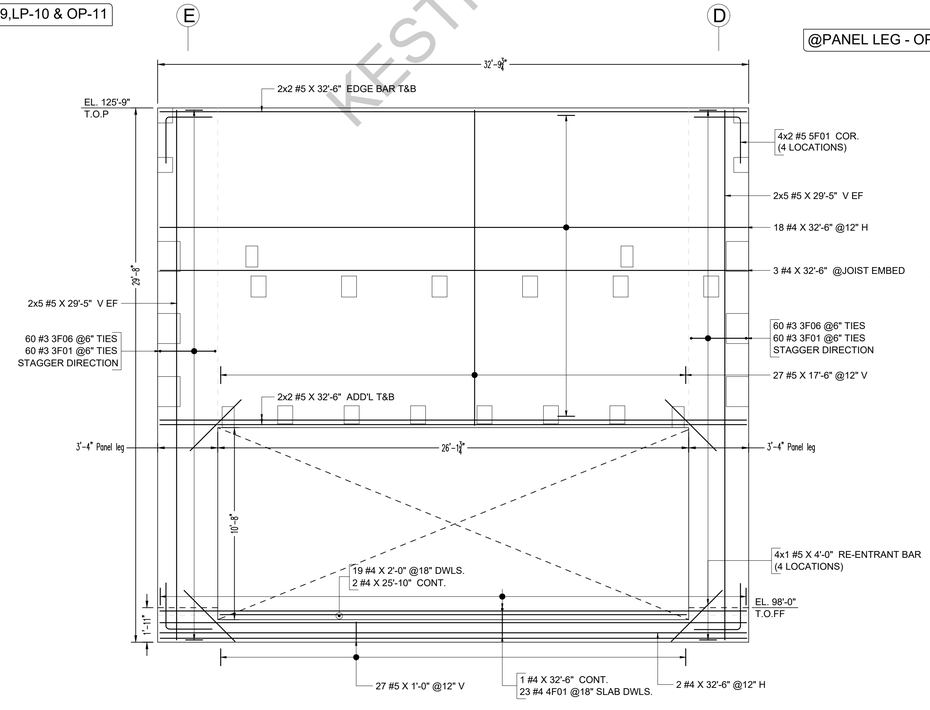

7 ¼" THICK

PANEL OP-11

REF: S1.0C,S2.0C,S3.0C & S5.0C

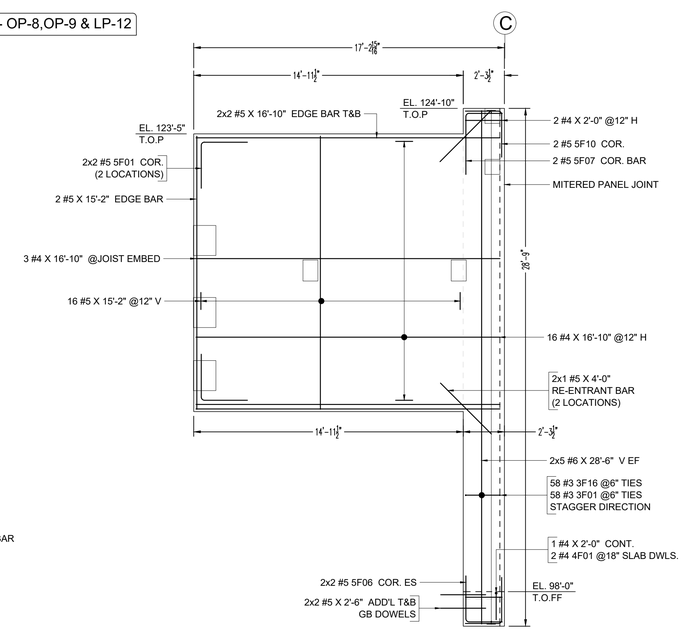

PANEL LP-12

REF: S1.0C,S2.0C,S3.0C & S5.0C

7 ¼" THICK

KESTRELS REBAR

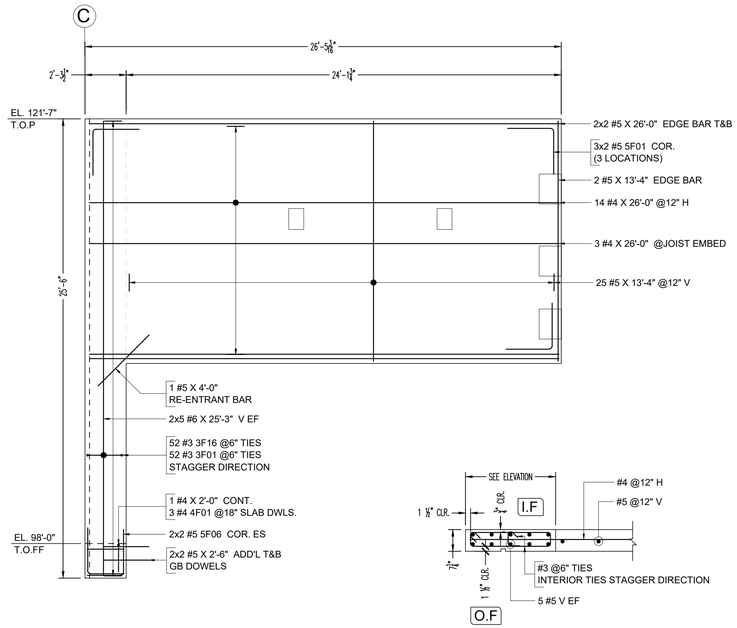

PANEL LP-13

REF: S1.0C,S2.0C,S3.0C & S5.0C

7 ¼" THICK

@PANEL LEG - OP-14 & P-15

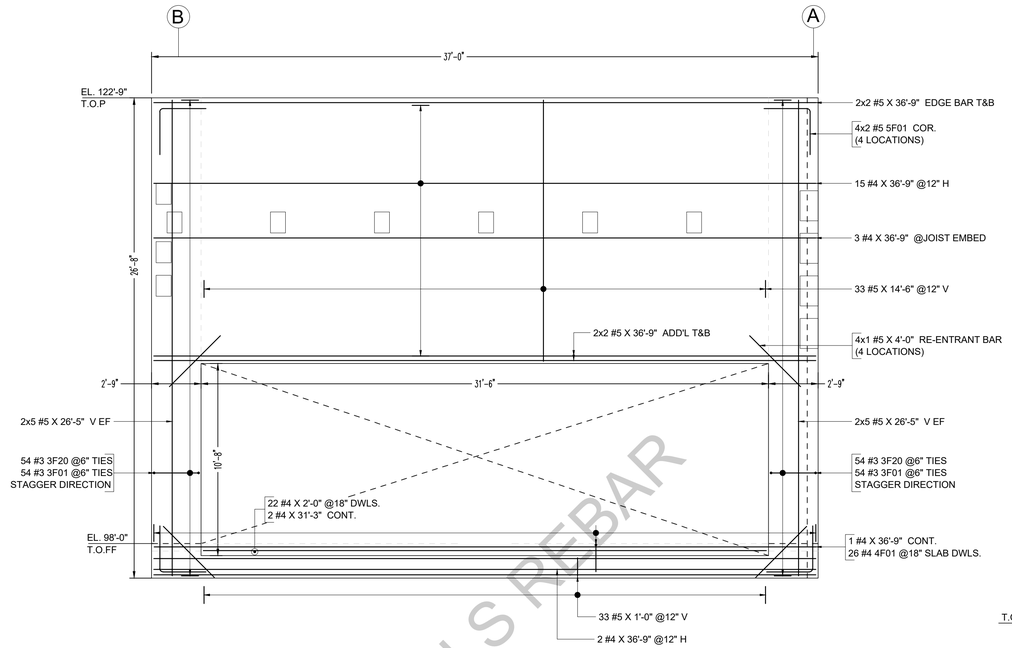

PANEL OP-14

REF: S1.0C,S2.0C,S3.0C & S5.0C

7 ¼" THICK

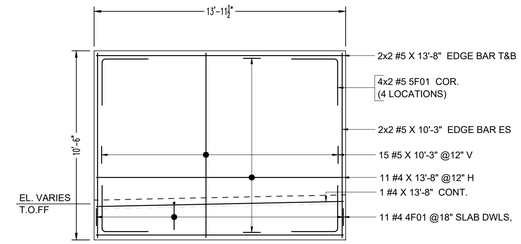

5 ½" THICK

DP-1

REF: S1.0C,S2.0C,S3.0C & S5.0C

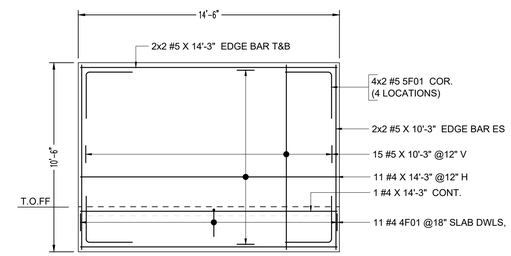

5 ½" THICK

DP-2

REF: S1.0C,S2.0C,S3.0C & S5.0C

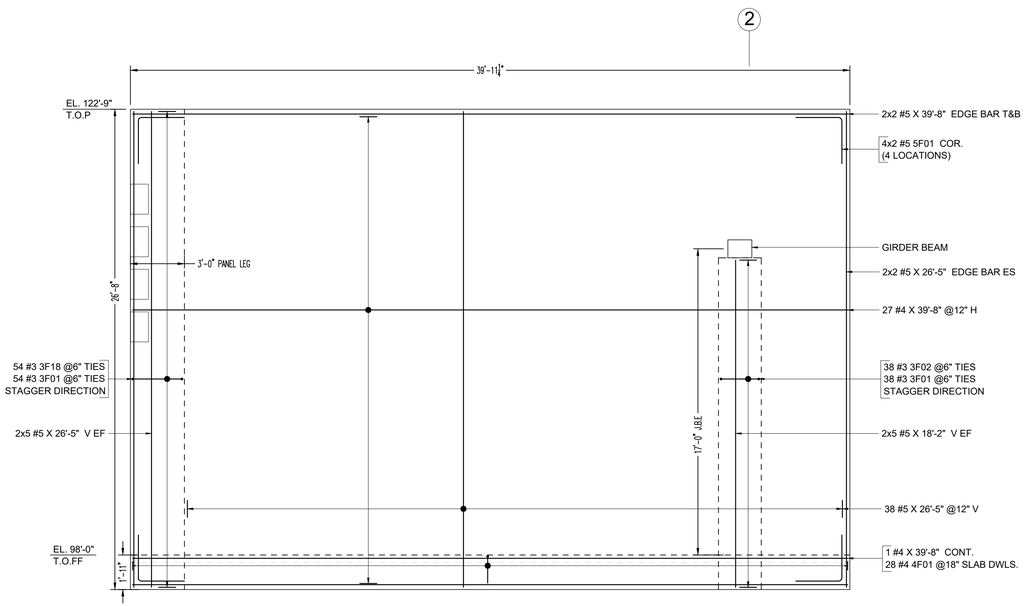

PANEL P-15

REF: S1.0C,S2.0C,S3.0C & S5.0C

7 ¼" THICK

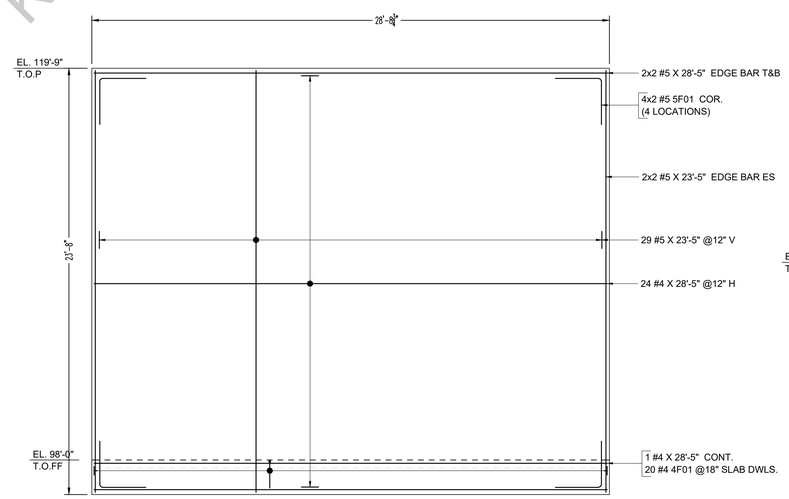

PANEL P-16

REF: S1.0C,S2.0C,S3.0C & S5.0C

7 ¼" THICK

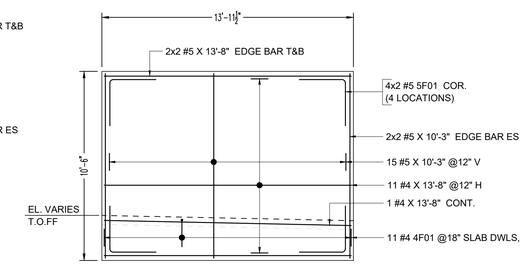

5 ½" THICK

DP-3

REF: S1.0C,S2.0C,S3.0C & S5.0C

KESTRELS REBAR

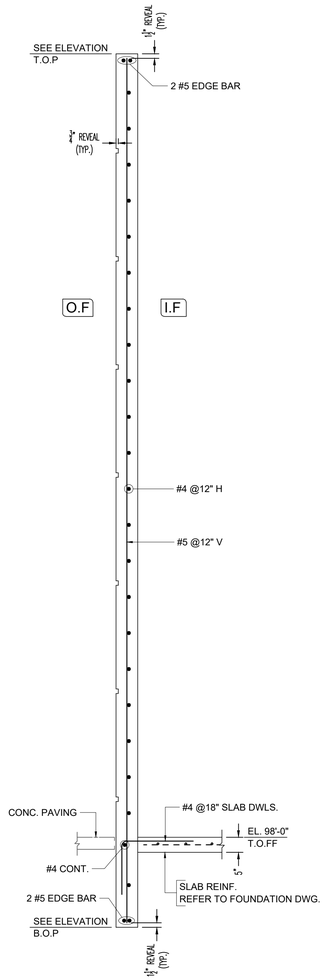

@NON OPENING PANELS

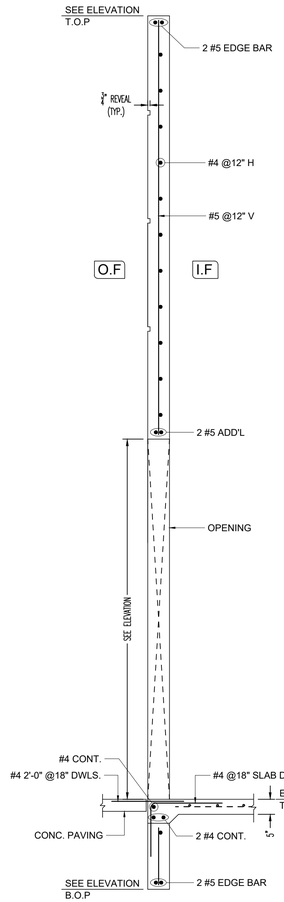

@OPENING PANELS

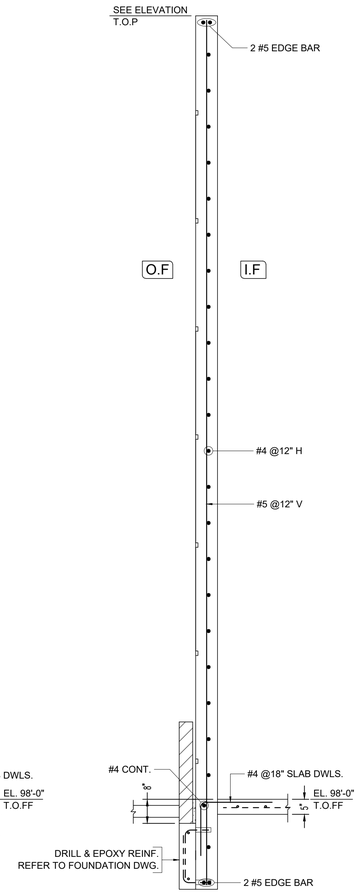

@VENEER LEDGE PANELS

Drawing Sheet : RF-12																BENDING DETAILS
Bar Mark	Qty	Size	Total Length	Type	'A'	'B'	'C'	'D'	'E'	'F'	'G'	'H'	'J'	'K'	'O'	'R'
5F14	2	#5	4'-7 ½"	3		2'-7"	2'-0 ½"					0'-6 ½"		1'-11 ¾"	4'-6 ¾"	
5F13	2	#5	4'-11 ¼"	3		2'-10 ¾"	2'-0 ½"					0'-6 ½"		1'-11 ¾"	4'-10 ½"	
5F01	142	#5	5'-2"	17		2'-7"	2'-7"									
5F12	8	#5	6'-1"	17		2'-3"	3'-10"									
5F11	2	#5	5'-7 ½"	17		2'-2 ½"	3'-5"									
5F10	2	#5	4'-7 ½"	17		2'-0 ½"	2'-7"									
5F09	2	#5	7'-4 ½"	17		2'-7"	2'-2 ½"	2'-7"								
5F08	2	#5	4'-9 ½"	17		2'-2 ½"	2'-7"									
5F07	2	#5	5'-5 ½"	17		2'-0 ½"	3'-5"									
5F06	8	#5	4'-7 ½"	17		2'-7"	2'-0 ½"									
3F03	52	#3	6'-0"	T1	0'-4"	0'-5"	2'-3"	0'-5"	2'-3"		0'-4"					
3F02	76	#3	5'-9"	T1	0'-4"	0'-5"	2'-1 ½"	0'-5"	2'-1 ½"		0'-4"					
3F09	52	#3	5'-0 ½"	T1	0'-4"	0'-5"	1'-9 ¼"	0'-5"	1'-9 ¼"		0'-4"					
3F07	58	#3	5'-11"	T1	0'-4"	0'-5"	2'-2 ½"	0'-5"	2'-2 ½"		0'-4"					
3F06	120	#3	7'-8"	T1	0'-4"	0'-5"	3'-1"	0'-5"	3'-1"		0'-4"					
4F01	279	#4	3'-6"	17		1'-6"	2'-0"									
3F16	110	#3	5'-2 ¼"	T7	0'-4"	0'-5"	1'-11"	0'-4 ¾"	1'-9 ½"		0'-4"	0'-5"		0'-1 ½"		
3F08	104	#3	4'-1 ½"	T7	0'-4"	0'-5"	1'-5 ¾"	0'-5 ¾"	1'-2"		0'-4"	0'-5"		0'-3 ¾"		
3F01	783	#3	1'-1"	T9	0'-4"	0'-5"					0'-4"					
3F19	49	#3	5'-1 ¼"	T7	0'-4"	0'-5"	1'-10 ½"	0'-4 ¾"	1'-9"		0'-4"	0'-5"		0'-1 ½"		
3F18	54	#3	7'-0"	T1	0'-4"	0'-5"	2'-9"	0'-5"	2'-9"		0'-4"					
5F16	2	#5	4'-7 ½"	3		2'-0 ¾"	2'-6 ¾"					0'-8"		2'-5 ¾"	4'-6 ½"	
5F18	2	#5	5'-6 ¾"	3		3'-5 ¾"	2'-0 ½"					0'-6 ½"		1'-11 ¾"	5'-5 ½"	
3F20	108	#3	6'-6"	T1	0'-4"	0'-5"	2'-6"	0'-5"	2'-6"		0'-4"					

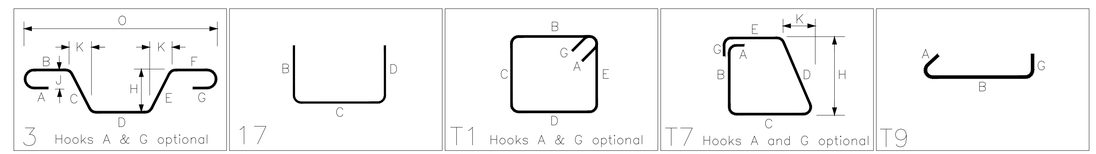

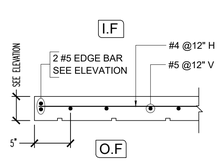

@PLAN VIEW PANELS

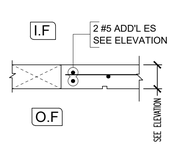

@OPENING

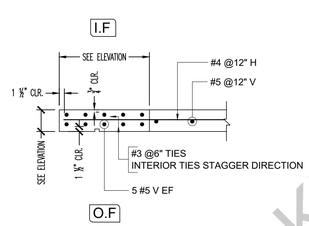

@PANEL LEG REINFORCEMENT

TYPICAL PANEL SECTION

REF: S1.0C,S2.0C,S3.0C & S5.0C

LAP SCHEDULE FOR PANELS (CLASS-B)		
SIZE	4000 PSI	
	TOP	OTHER
#3	24"	19"
#4	32"	25"
#5	40"	31"
#6	48"	37"
#7	70"	54"
#8	80"	62"
#9	91"	70"
#10	102"	79"
#11	113"	87"

NOTES:-

1. TYPICAL CLEARANCES
   A). END - 1 ½"
   @ PANEL LEG
   B). INNERFACE - ¾"
   C). OUTERFACE - 1 ½"
   D). END - 1 ½"
2. A/E/C PLEASE VERIFY THE ALL CLOUDED ITEMS
3. PROVIDE FIELD CUT AS REQUIRED LOCATIONS
4. BARS TO BE PLACED AT EQUAL SPACING U.O.N.
5. TILT HOOK TO ACCOMODATE THE COVER, IF NEED

ALL BARS ARE ASTM A615 GRADE 60 BLACK

KESTRELS REBAR